wöhner
ALLES MIT SPANNUNG

Product manual

2011

English

New from Wöhner.

Flexible, easy to mount and safe – we are committed to these standards in all Wöhner systems. Safety is a special priority. This has resulted in extensive shock protection, durable contacting solutions for busbars and operator-independent switching, as featured in our QUADRON®CrossLinkSwitch.

At Wöhner another driving force for the future is the development of innovative products for applications in the regenerative energy sector.

60mm-system compact, connecting terminal plate with cover cap, 54 mm wide, connection cross section 6–50 mm²

Chapter 1, Page 1

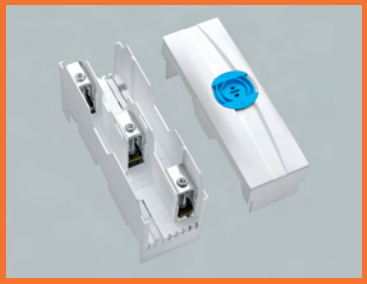

QUADRON®CrossLink components up to 250A, QCB NH size 1, QCC Class J 200 A, QCC NH size 1

Chapter 2, Page 23

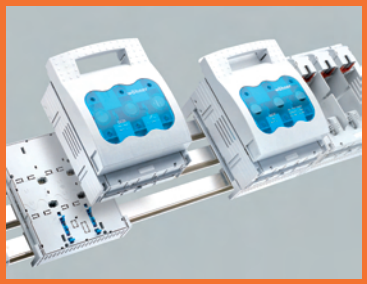

NH-fuse base, size 1XL
1500 V DC, for photovoltaic applications

Chapter 5, Page 2

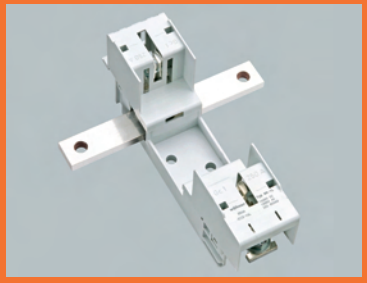

QUADRON®CrossLink Carrier for Class J fuses up to 30A, 60A, 100A for bus- and panel-mounting

Chapter 2, Page 21, 32 and Chapter 5, Page 12

EQUES®PowerConnector 160 A, in CrossLink® Technology for circuit breaker NZM1

Chapter 2, Page 15

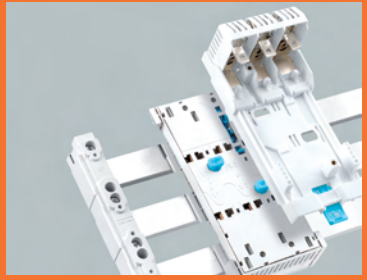

EPLAN item data for fast system planning. Data packs for EPLAN Electric P8 and 5 for download.

www.woehner.com

ePLAN®

Notes on the use of this manual

Products with CrossLink®
adaptor technology

Designated products for feeder circuits
approved in compliance with UL 508A up to 600 V

	Part No.	
	01 508	05
	32 009	05
	32 289	05
	32 290	05
	32 291	05
	32 604	05

Designation for UL 508A feeder circuit 600V

Product group number

Dimensioned drawings in Chapter 9

Illustrated products

New products

Additional information in
Chapters 7, 8, 9

Designation for UL 508A	Accessories	**7** 4	→
Approvals **8** 47–52	Technical Data	**8** 8	→
New	Dimensions	**9** 1,2	→

1 60mm-system compact 360A

Overview **1**
Busbars, covers, connection technology **1**.1
Adaptor technology, D0 busbar-mounting fuse bases, NH fuse technology **1**.2
5-pole system: connection technology, adapter technology, NH fuse technology **1**.3
5-pole system, adapter technology **1**.4

2 60mm-system classic 630A (800A) / 2500A

Overview **2**
Busbar support, shrouding, busbars **2**.1–3
Connection technology **2**.6–10
Adapter technology **2**.11–17
D0 and D fuse bases and D0 switches **2**.18,19
Busbar-mounting fuse holders for cylindrical fuses **2**.20
NH fuse bases / NH fuse switch disconnectors **2**.21–30
NH in-line fuse switch disconnectors **2**.31
Class J and Class CC fuse bases **2**.21,32
Switch disconnectors **2**.21–26
Switch disconnectors with NH fuses **2**.21–26
4-pole components **2**.33

3 Centre feed unit up to 4000A

Overview **3**
Centre feed unit up to 4000A **3**.1,2
TCC section busbars **3**.3

4 100mm-system 1250A / 185mm-system power 2500A

Overview **4**
Busbar support, busbars, connection technology for 100mm-system **4**.1,2
NH fuse bases for 100mm-system **4**.3
NH in-line fuse switch disconnectors for 100mm-system **4**.4
Busbar support, busbars, connection technology for 185mm-system power **4**.5,6
NH in-line fuse switch disconnectors for 185mm-system power **4**.7–10

5 Panel-mounting components

Overview **5**
Holder for cylindrical fuses for photovoltaic applications **5**.1
NH fuse bases for photovoltaic applications **5**.2
D0 and D mounted fuse bases **5**.3–5
Holder for cylindrical fuses in compliance with IEC **5**.7–10
Holder for cylindrical fuses in compliance with UL/CSA **5**.11–12
NH fuse bases **5**.13–14

6 Switch disconnectors and fuse switch disconnectors

Overview **6**
D0 fuse switch disconnectors **6**.1,2
Switch disconnectors **6**.3
Switch disconnectors with NH fuses **6**.4
NH fuse switch disconnectors **6**.5–7
Switch disconnectors **6**.8
Switch disconnectors with fuses **6**.9–11

7 Accessories

Special solutions and accessories **7**.1–4
Laminated flexible copper busbars **7**.5,6
Main branch terminals **7**.7,8
Accessories for D0, D and NH fuses **7**.9–12
Cylindrical fuses 8 x 31, 10 x 38, 14 x 51 and 22 x 58 **7**.13–16
Cylindrical fuses Class CC and Class J **7**.17–20

8 Technical data

Technical specifications **8**.1–36
Current capacity of busbars **8**.6,7
Short-circuit strength diagrams **8**.37,38
Maximum permitted operating voltage **8**.39–46
Approvals **8**.47–52

9 Dimensions

Dimensions **9**.1–46

10 Appendix

Conditions of delivery and payment **10**.1–4
Index **10**.5–16
Contacts worldwide **10**.17–26

60mm-System compact

360A

Continuity

Busbar adaptor, 1-pole

18mm wide, for line circuit breaker

Contact can be adjusted to L1, L2, L3 or N

Models for up to 32A and up to 63A

System Benefits

The new 60mm-system compact with an installation height of 160mm is the ideal solution for power ratings up to 360A. It takes up significantly less space as compared to 60mm systems in the power range where 40mm systems had often previously been used.

An important advantage comes from the option of combining it with the 60mm system classic: the resulting variety of components produces many user benefits.

In addition, the components of the 60mm-system compact meet the requirements of the broad air and creepage distances in accordance with UL 508. They are therefore suitable for use in North America. More detailed information can be found in the approval overview starting at page 8/45 and in the product descriptions on the Internet at www.woehner.com.

Should you have any further questions, please contact our UL hotline at: +49 (0) 9563 / 751 508.

Connection Technology

Convenient terminals, which require no drilling, are available for connecting conductors with cross-sections from 1.5 to 150mm² and flat conductors up to 2 x 20 x 10mm. A connecting terminal plate provides for shock protection and compliance with air and creepage distances in accordance with the North American UL and CSA standards.

EQUES® Technology

Adaptor technology for safe mechanical and electrical connection of switchgear to the busbar. The EQUES® EasyConnector with compact dimensions can also be supplemented with the adaptors of the 60mm system classic series for larger switchgear combinations and for circuit breakers rated over 100A.

CUSTO®EasyLiner

The use of current-limiting fuses combines a high switching capacity with the lowest possible let-through energy when being switched off. Sub-distributions up to 160kW can be built using a compact, space-saving format in buildings with D02 bus-mounting fuse elements.

EQUES®EasyConnector

Adaptor for motor circuit breaker

45 and 54mm width

Power range up to 63A

Can be combined with 9 mm side-mounted module

60mm-System compact 5-pole

Space-saving system up to 200A

Height 160mm with up to 5 busbars

QUADRON®CrossLinkBreaker
Size 000

NH fuse switch disconnector 00C
up to 125A

CrossLink® Technology:
- Externally sprung contact
- Can be safely expanded
- Simple spare slot mounting
- Connection direction can be changed simply, safely and quickly bottom/top

QUADRON®CrossLinkBreaker

The compact design of the NH fuse switch disconnectors in size 000 provides you optimum benefits from the space-saving compact system. In combination with the 60mm system classic, the application area can also be expanded to include the other sizes. The CrossLink® Technology opens up an additional range of applications by virtue of the option of exchanging devices with the same adaptor modules. For more information on CrossLink® Technology, see Chapter 2.

System components, 5-pole

In a 5-pole configuration the 60mm-system compact maintains an overall height of 1500mm: neutral and earth conductors are aligned between the phases. This creates new, space-saving possibilities:
The busbar supports in the compact system are intended to bear all 5 busbars. The busbars, the cover sections as well as the optional base plate remain the same.
A variable terminal module is available under the connection technology. To connect conductors up to 120mm^2 1-pole elements are used that can be combined as required and ganged with connectors.
The adapter technology is designed for the module width 18mm. 1-pole elements can be adjusted, to one of the phase busbars or the neutral conductor as required. Empty adaptors and connectors make a variable and simultaneously compact mounting possible. Narrow neutral and earth modules for the conductor connection complete the system.

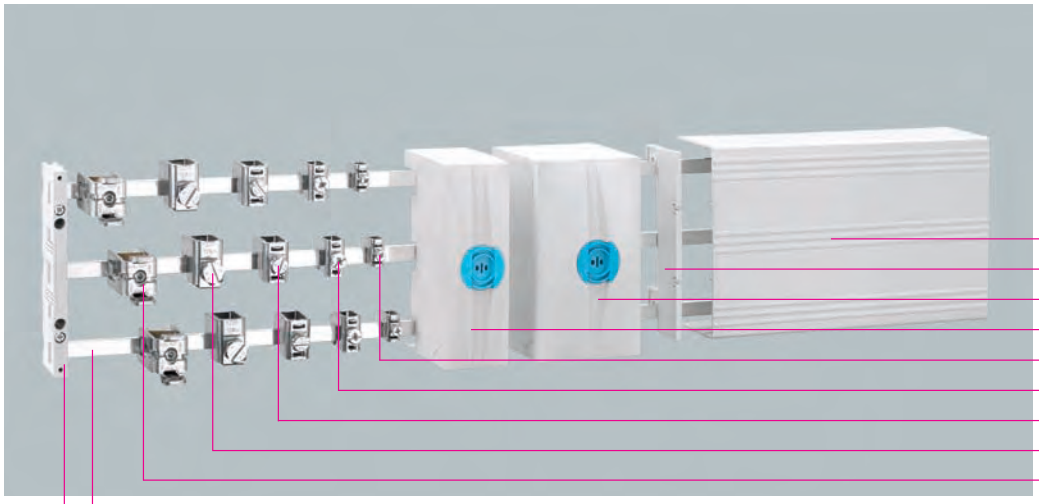

wöhner UL 508 certified products

01 314 **
01 317
01 165
01 401
01 284
01 285
01 287
01 068
01 135
01 618
01 272

60mm-system compact, 3-pole, system height 160mm

Busbar support

Type	Pack size	Weight kg/100 units		Part no.	
3-pole, for 12 x 5 and 12 x 10 flat busbars, with end cover	10	6.8		01 272	06
18mm separator for UL 508, fits under 01 272	10	5.2		01 374	06

Busbar E-CU, tub-plated

Type	Length	Cross section mm²	Pack size	Weight kg/100 units		Part no.	
12 x 5	2.4m	60	1	128.2		01 618	06
	790mm	60	1	42.8		01 381	06
	590mm	60	1	32.0		01 382	06
12 x 10	2.4m	120	1	256.3		01 623	06
	790mm	120	1	85.6		01 389	06
	590mm	120	1	64.0		01 390	06

Cover section, 3-pole

0.7m long	2	42.0		01 314	06
mount for cover section 01 314	10	1.8		01 317	06

Universal conductor terminal

Busbars	Connection mm² min.-max.	Terminal space W X H	For use up to max.	Pack size	Weight kg/100 units		Part no.	
for 5mm flat busbars	1.5 – 16	7.5 x 7.5	180A	100	2.1		01 284	07
	4 – 35	10.5 x 11	270A	50	4.6		01 285	07
	16 – 70	14 x 14	400A	25	7.1		01 287	07
	16 – 120	17 x 15	440A	25	10.6		01 068	07
for 10mm flat busbars	1.5 – 16	7.5 x 7.5	180A	100	2.3		01 289	07
	4 – 35	10.5 x 11	270A	50	4.7		01 290	07
	16 – 70	14 x 14	400A	25	7.5		01 292	07
	16 – 120	17 x 15	440A	25	10.9		01 203	07

CRITO®ProfiClip, brace terminal

for 12–20 x 5–10 flat busbars	35 – 150	20 x 22	480A	6	10.2		01 135	07

Connecting terminal plate with cover cap

3-pole, 6–50 mm², f, f+AE, fl. Cu 6 x 9 x 0.8	54 x 160	300A	1	20.6		01 401	07
3-pole, for 35 - 150mm² round conductors and fl. Cu up to 10 x 20 x 1	90 x 160	480A	1	57.5		01 165	07

** UL-certified products are highlighted in grey

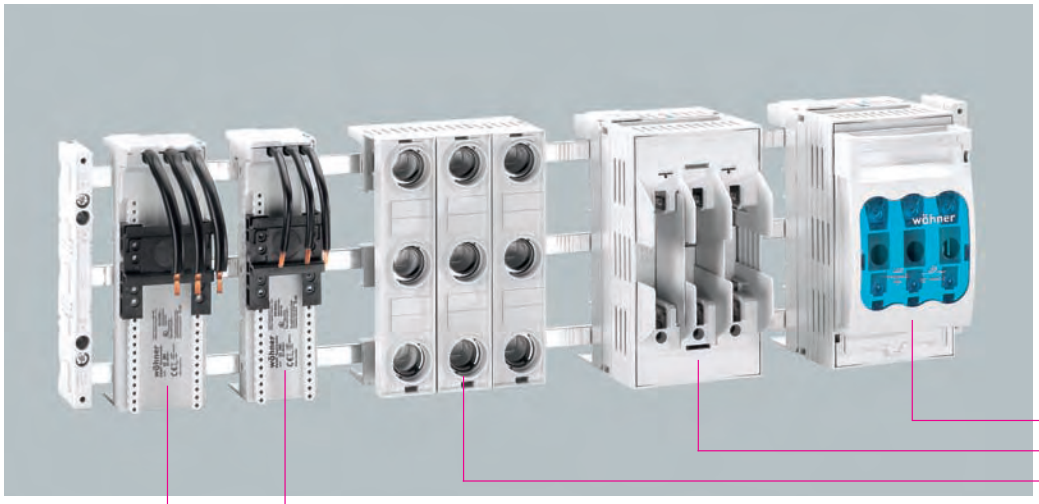

wöhner UL 508 certified products

** UL-certified products are highlighted in grey

33 416
03 316
31 554
32 590 **
32 591

60mm-system compact, 3-pole, system height 160mm

End-to-end busbar connection, for same-size busbars

Busbars	Length	System spacing	For use up to max.	Pack size	Weight kg/100 units		Part no.	
12 x 5 / 10	55	5 – 10	630A	12	19.2		01 166	07
12 x 5 / 10	150	100 – 110	630A	3	52.4		01 193	07

EQUES®EasyConnector, busbar adapter

Type	Pack size	Weight kg/100 units		Part no.	
32A, 1 mounting rail, 45 x 160mm	4	19.8		32 590	05
63A, 1 mounting rail, 54 x 160mm	4	21.8		32 591	05
9mm side-mounted module, connectable on both sides	10	2.0		32 912	05

CUSTO®EasyLiner, D0 bus-mounting fuse base 63A

3-pole, 36 x 160mm, size D02	6	13.0		31 554	01

QUADRON®CrossLinkCarrier, NH bus-mounting fuse base 125A

3-pole, 90 x 160mm, size NH000, NH00C	1	70.3		03 316	10
grip lug cover, 1 unit required for each NH base	4	2.7		03 287	10

QUADRON®CrossLinkBreaker, NH bus-mounting fuse switch disconnector 125A

3-pole, 90 x 160mm, size NH000, NH00C	1	90.0		33 416	09
pilot switch for monitoring lid position for 33 416	1	1.1		33 156	09
lid interlock for sealing wire for 33 416	10	0.2		33 905	05

Designation for UL 508A			
Approvals	Technical data	8 10,12,16,22,24	→
	Dimensions	9 2,11,29	→

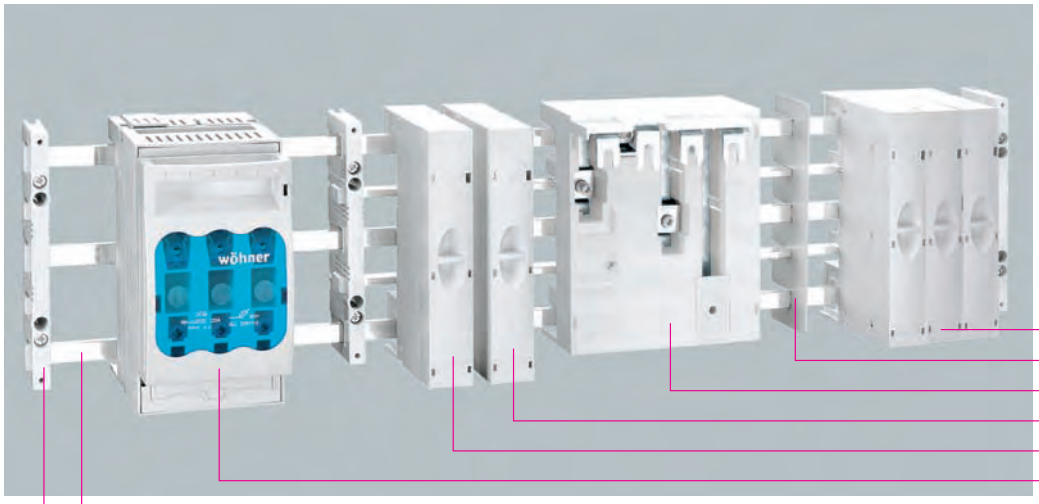

01 370
01 376
32 640
01 367
01 364
33 416
01 618
01 272

60mm-system compact, 5-pole, system height 160mm

Busbar supports

Type	Pack size	Weight kg/100 units		Part no.	
3, 4, 5-pole, for 12 x 5 flat busbars, with end cover	10	6.8		01 272	06

Intermediate busbar brace, 2mm wide

for 3, 4, 5-pole system	10	1.5		01 376	06

Busbars

12 x 5 flat busbar, 2.4m long, tin-plated	1	128.2		01 618	06

Cover section, can only be used with holder 01 317

0.7m long	2	42.0		01 314	06
mount for cover section 01 314	10	1.8		01 317	06
base plate, 0.7m long	2	26.7		01 371	06

Connection set

Type	Width	Length	Pack size	Weight kg/100 units		Part no.	
connection set, 3-pole, 10–120mm²	90	160	1	60.0		01 370	07
connection module N, 10–120mm²	30	160	1	21.5		01 364	07
connection module PE, 10–120mm²	30	160	1	21.5		01 367	07

QUADRON®CrossLinkBreaker, NH bus-mounting fuse switch disconnector, 125A
can only be used in the 3-pole system

Type	Pack size	Weight kg/100 units		Part no.	
3-pole, 90 x 160mm, size NH000, NH00C	1	90.0		33 416	09

Busbar adaptor, 4-pole

Type	Width	Pack size	Weight kg/100 units		Part no.	
160A, for Schneider Electric INS160	141	1	64.0		32 640	05

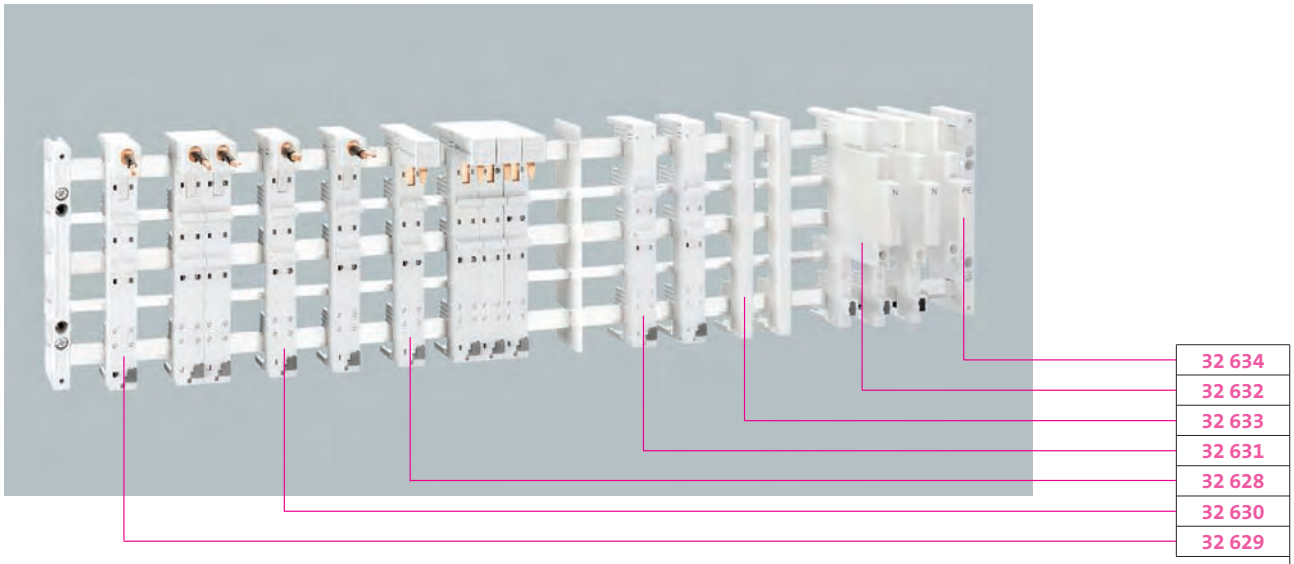

60mm-system compact, 5-pole, system height 160mm

Busbar adaptor, modular

Type	Adapter width	Adapter length	Pack size	Weight kg/100 units		Part no.	
1-pole, 32A	18	160	12	6.0		32 629	05
1-pole, 63A	18	160	12	6.6		32 630	05
1-pole, 63A, for Schneider Electric C60	18	160	12	7.0		32 628	05
contact can be set to L_1, L_2, L_3 or N							
module N, with terminal 16mm²	9	160	12	4.4		32 632	05
module PE, with terminal 16mm²	9	160	12	4.4		32 634	05
component support, 1-pole	18	160	6	3.3		32 631	05
side-mounted module	9	160	12	1.2		32 633	05
connection set for creating multi-pole adaptors (50 connections possible)			1	2.0		31 390	17

Know-how

60mm-System classic

630A (800A)/2500A

System Benefits

The small external dimensions of the 60mm busbar system allow for a wide range of busbars, so that it can be easily adapted to a wide range of currents. These features result in the particularly safe, space-saving and clearly laid-out design of this system, which also has the largest component selection. In addition, numerous components of the Wöhner 60mm busbar system meet the expanded requirements according to UL 508 for applications in North America that were introduced in 2005. Since 2008, many items are c UL us LISTED and can therefore be used without an additional entry in the file of the system builder and without CoAs. Detailed information on these requirements is located in the approval overview starting on page 8/45 and in our 'Busbar system in compliance with UL standard' information brochure as well as in the product descriptions available online at www.woehner.com.

Should you have any further questions, please contact our UL hotline at: +49 (0)9563/751 508.

Connection Technology

Conductors with a cross section of up to 300mm² can be connected using universal conductor terminals or connecting terminal plates, and no drilling is required. Even uncut conductors can be connected to the connecting terminal plates to connect two busbar systems, for example. CRITO®ProfiClips, with their saddle-clamp terminal technology, allow rapid connections to be made to both round and laminated conductors. End-to-end busbar connections, which permit fast and easy extension of busbar systems, are also available.

EQUES®Technology

Adaptor technology in the 60mm-system: With many innovative features the EQUES®EasyConnector, the EQUES®PowerConnector and EQUES MotorController provide safe connection to busbars from 12 x 5mm to 30 x 10mm and double-T and triple-T sections up to 2500A. The EQUES MotorController offers new areas of application with greater electrical safety thanks to its new double structure: While the mounted IEC components are being replaced, the busbar is protected from contact. New versions of the EQUES®PowerConnector now also offer the option of directly connecting 4-pole circuit breakers to the busbar system.

SECUR®PowerLiner

The device series for D0 fuses is connected, without drilling, to the busbar system. Currents up to 63A can be switched safely using the SECUR®PowerLiner for D0 fuses.

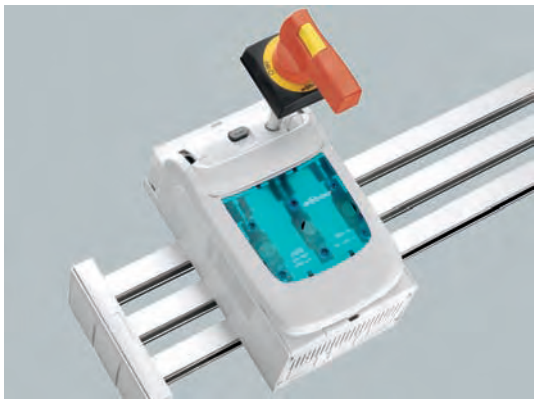

QUADRON®CrossLinkSwitch

Bus-mounting switch disconnector

Model with and without fuses

Safe, operator-independent switching by means of spring-controlled switch mechanism and double break

Version with door coupling twist handle and shaft extension for operation with closed door

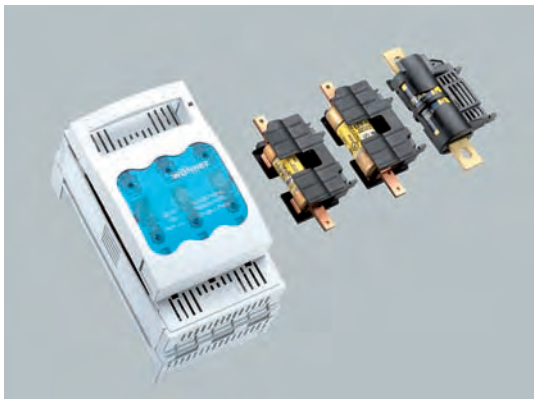

QUADRON®CrossLinkCarrier

Bus-mounting fuse base for Class J

Holder for fuses according to American standard, for direct snap-in mounting on the busbar

In versions 30A, 60A, 100A and 200A

Fuses can be replaced without the need for tools

CrossLink® Technology

A variety of uses for different applications

Various device components are mounted using the same adaptors (without screws)

Better safety thanks to optimum shock protection

The direction of connection can be easily changed, and components can be replaced and upgraded, providing additional flexibility

Bus-Mounting Fuse Bases

The 60mm-system can be fitted with size D0 and size D 3-pole bus-mounting , as well as cylindrical 10 x 38mm and UL Class CC fuse bases. The CUSTO®EasyLiner has extensive shock protection including a strip cover. NH fuse with shock protection are available up to size 2. Additionally, special low-voltage power bases can be supplied for semi-conductor fuses.

CrossLink®Technology

New CrossLink® Technology allows for a variety of uses in different applications. Different system components from the same device category have the same overall width and they all use the same adaptors. CrossLink® Technology thereby improves the flexibility and safety of your systems.

QUADRON®CrossLinkCarrier

The new bus-mounting fuse base for Class J fuses has an extraordinarily compact design, allows fuses to be replaced without the need for tools, and provides integrated shock protection. It complies with the UL and CSA standards for the North American market.

QUADRON®CrossLinkBreaker

All NH bus-mounting fuse switch disconnectors can be fitted with terminals at either the bottom or top. Externally sprung contact blades ensure easy and secure connection on the busbar system.

QUADRON®CrossLinkSwitch

The highlight of CrossLink® Technology is the bus-mounting switch disconnector with NH fuses. Its spring-controlled switch mechanism guarantees safe, operator-independent switching. The QUADRON®CrossLinkSwitch prevents accidental switching on when the lid is open and provides a locking device with up to 3 locks. It is easy and safe to change NH fuses.

EQUES®PowerConnector

The CrossLink® Technology extension increases safety during maintenance and repairs since the busbar system remains covered and shock-protected. Choose top or bottom connection as required!

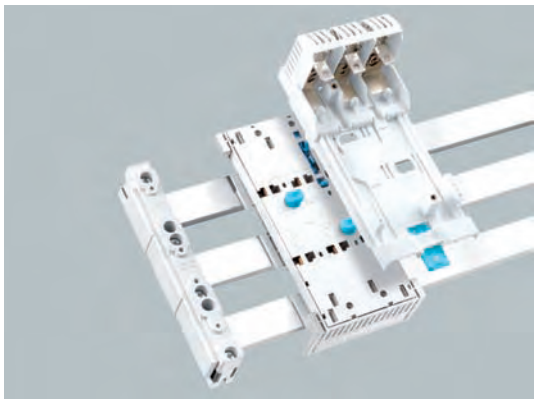

NEW

EQUES®CrossLinkAdapter

Adapter for circuit breaker up to 160A

Choice of top/bottom outgoing connection

Same basis adaptor for all CrossLink device modules up to 200A

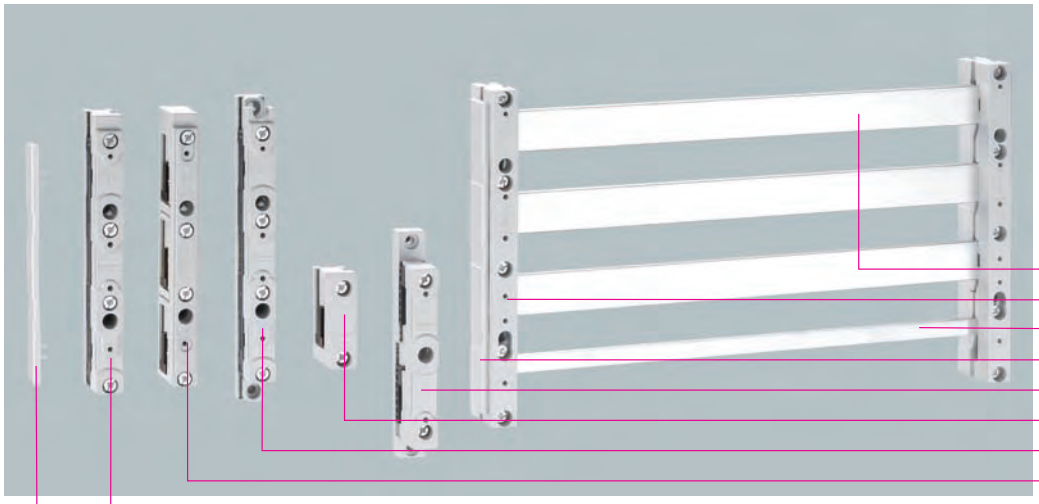

** UL-certified products are highlighted in grey

01 622 **
01 485
01 619
01 131
01 356
01 601
01 500
01 508
01 495
01 573

Universal busbar support

Type	Busbars	Pack size	Weight		Part no.	
			kg/100 units			
2-pole with internal screw holes	12, 20, 30 x 5, 10	1	8.3		01 602	06
3-pole with internal screw holes	12, 15, 20, 25, 30 x 5, 10	10	12.7		01 495	06
3-pole with additional external screw holes	12, 15, 20, 25, 30 x 5, 10	10	13.7		01 500	06
4-pole with internal screw holes	12, 15, 20, 25, 30 x 5, 10	10	26.6		01 485	06

UL busbar support

3-pole with internal screw holes	12, 20, 30 x 5, 10	10	14.0		01 508	06
18 mm spacer, suitable for 01 508		10	9.1		01 358	06
4-pole with internal screw holes	12, 20, 30 x 5, 10	10	19.7		01 357	06
spacer, suitable for 01 357		10	13.1		01 359	06

Base plate, for UL busbar support 01 508, 01 231, 01 232

240 x 1100		2	73.7		01 518	06
240 x 700		2	46.9		01 515	06

PE/N busbar supports, including PE and N labels

2-pole individually mountable	12, 15, 20, 25, 30 x 5, 10	10	9.5		01 356	06
1-pole individually mountable	12, 20, 30 x 5,10	1	5.9		01 601	06

Connection busbar support

2-pole with integrated 1.5 – 16mm² terminals	12, 15, 20, 25, 30 x 5, 10	10	27.9		01 484	06

End cover, for covering busbar ends

Type	Pack size	Weight		Part no.	
		kg/100 units			
for 01 602	1	1.5		01 363	06
for 01 495, 01 500, 01 508 and 01 484	10	2.0		01 573	06
for 01 357 and 01 485, set right and left	5	5.6		01 131	06

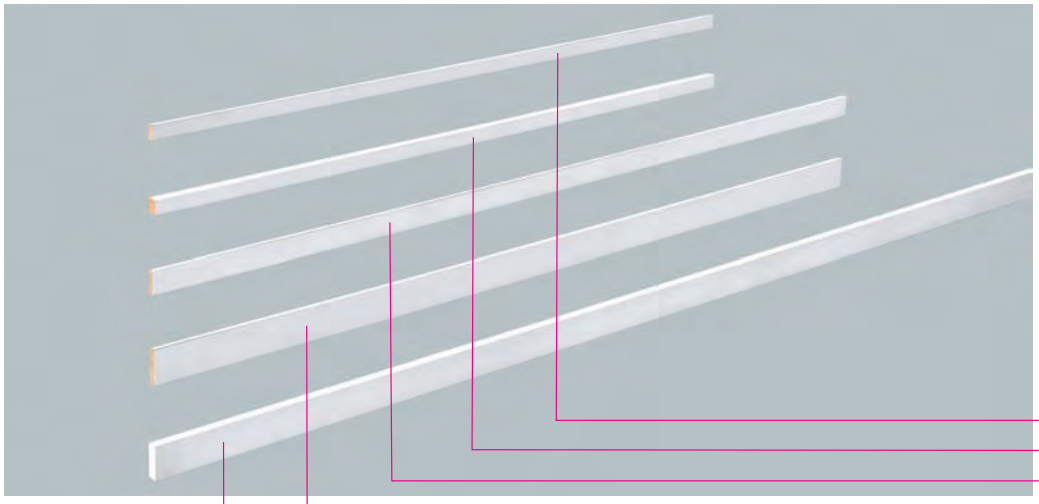

** UL-certified products are highlighted in grey

01 382 **
01 390
01 383
01 387
01 625

Standard copper busbars, tin-plated

Dimensions	Length	Cross section	Pack size	Weight		Part no.	
		mm²		kg/100 units			
12 x 5	2.4m	60	1	128.2		01 618	06
	790mm	60	1	42.8		01 381	06
	590mm	60	1	32.0		01 382	06
15 x 5	2.4m	75	1	160.2		01 619	06
20 x 5	2.4m	100	1	213.6		01 620	06
	790mm	100	1	71.3		01 383	06
	590mm	100	1	53.4		01 384	06
25 x 5	2.4m	125	1	267.0		01 621	06
30 x 5	2.4m	150	1	320.4		01 622	06
	790mm	150	1	107.0		01 387	06
	590mm	150	1	80.1		01 388	06
12 x 10	2.4m	120	1	256.3		01 623	06
	790mm	120	1	85.6		01 389	06
	590mm	120	1	64.0		01 390	06
20 x 10	3.6m	200	1	650.0		01 140	06
	2.4m	200	1	427.2		01 624	06
	790mm	200	1	142.6		01 391	06
	590mm	200	1	106.8		01 392	06
30 x 10	3.6m	300	1	961.0		01 204	06
	2.4m	300	1	640.8		01 625	06
	790mm	300	1	214.0		01 393	06
	590mm	300	1	160.2		01 394	06

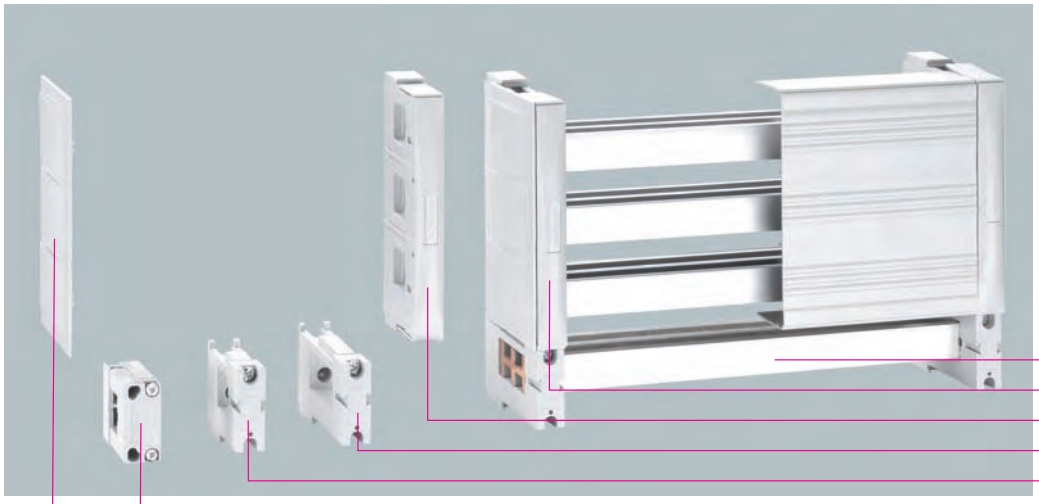

** UL-certified products are highlighted in grey

Busbar support, for double-T profiles without end cover

Type	Pack size	Weight		Part no.	
		kg/100 units			
1-pole, individually mountable only	10	15.8		01 876	06
1-pole, for connection to 01 231 and individually mountable	4	13.0		01 116	06
3-pole	3	59.1		01 231	06

Busbar support, for triple-T profiles without end cover

Type	Pack size	Weight		Part no.	
		kg/100 units			
1-pole, for connection to 01 232 and individually mountable	4	15.0		01 132	06
3-pole	2	69.7		01 232	06

End cover

for 01 116 and 01 132	4	1.8		01 373	06
for 01 231 and 01 232	4	4.8		01 234	06

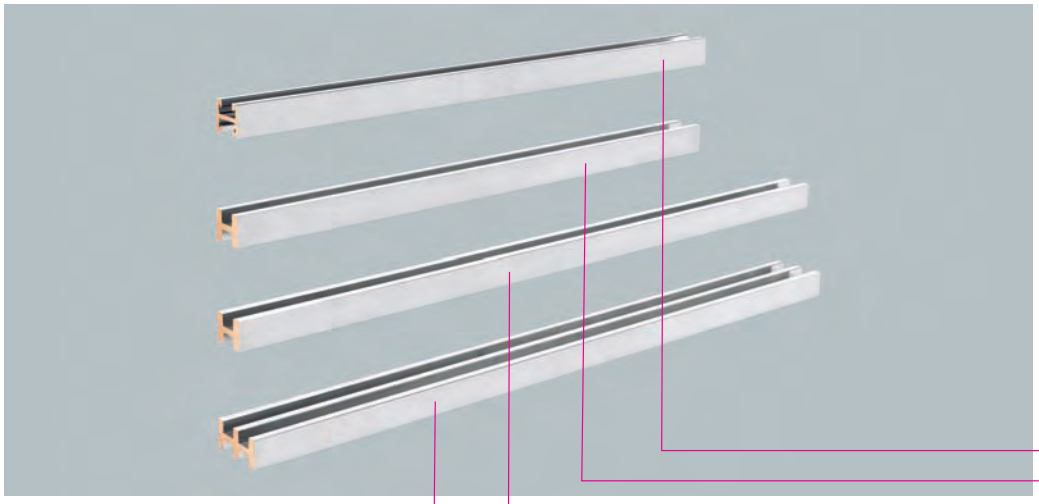

** UL-certified products are highlighted in grey

01 396 **
01 398
01 397
01 399

Standard copper busbar, tin-plated section profiles

Type	Length	Cross section	Pack size	Weight		Part no.	
		mm²		kg/100 units			
double-T section busbar	3.6m	500	1	1566.0		01 224	06
	2.4m	500	1	1044.0		01 609	06
	790mm	500	1	348.6		01 395	06
	653mm	500	1	288.1		01 226	06
	590mm	500	1	261.0		01 396	06
	453mm	500	1	198.8		01 225	06
double-T section busbar	3.6m	720	1	2310.0		01 190	06
	2.4m	720	1	1540.0		01 608	06
	790mm	720	1	514.3		01 397	06
	653mm	720	1	419.0		01 831	06
	590mm	720	1	385.0		01 398	06
	453mm	720	1	291.0		01 838	06
triple section busbar	3.6m	1140	1	3654.0		01 227	06
	2.4m	1140	1	2436.0		01 187	06
	790mm	1140	1	813.6		01 399	06
	653mm	1140	1	672.3		01 189	06
	590mm	1140	1	609.0		01 400	06
	453mm	1140	1	464.0		01 188	06

Standard copper busbar, plain section profiles

Type	Length	Cross section	Pack size	Weight		Part no.	
		mm²		kg/100 units			
double-T section busbar	3.6m	500	1	1566.0		01 223	06
	2.4m	500	1	1044.0		01 250	06
double-T section busbar	3.6m	720	1	2310.0		01 229	06
	2.4m	720	1	1540.0		01 249	06

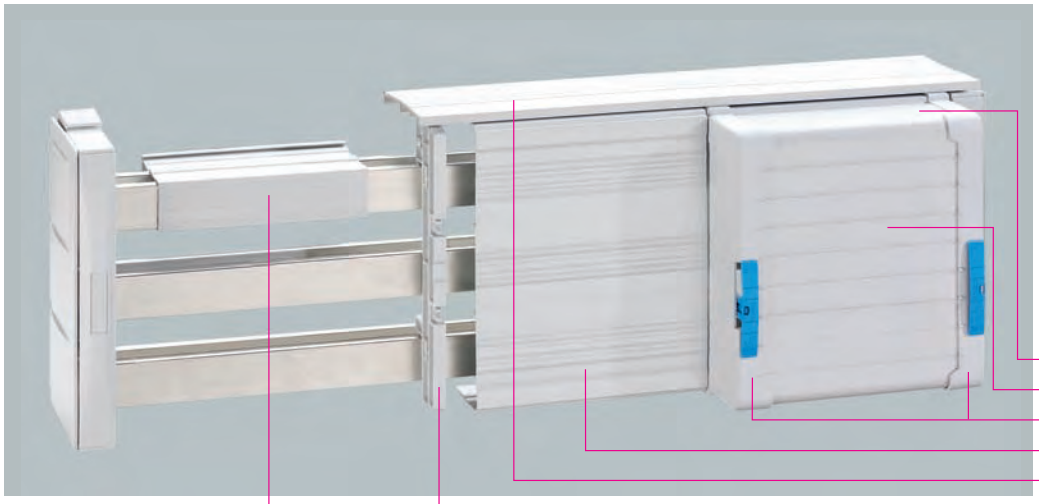

** UL-certified products are highlighted in grey

Busbar cover

Type	Pack size	Weight kg/100 units		Part no.	
for 12 – 30 x 5, 1m long	10	8.7		01 244	06
for 12 – 30 x 10, 1m long	10	10.1		01 245	06
for double-T and triple-T section, 1m long	5	38.0		01 252	06
for 12 x 5, 1m long	10	3.2		78 463	06
independent of the system, for individual busbars					

Reserve section cover, 3-pole

cover section, 0.7m long, can only be used with mount no. 01 026 or 01 320	2	47.8		01 025	06
mount, 32mm depth, for cover section no. 01 025	10	3.9		01 026	06
mount, 107mm depth, for cover section no. 01 025 can be combined with with 01 237, 01 238	8	12.0		01 320	06
can be used for systems with 12 x 5, – 30 x 10 busbars, double-T and triple-T section					

System cover, 3-pole

holder set (left + right) for cover sections, 3-pole	1	18.0		01 136	07
front cover section (3-pole), 1.1m long, can only be used with holder no. 01 136	1	45.1		01 554	07
top/bottom cover section, 1.1m long, can only be used with holder no. 01 136 or 01 037	2	27.1		01 555	07
cover section top/bottom, slotted, 1.1m long, can only be used with holder no. 01 136 or 01 137	2	24.5		01 417	07
can be used for systems with 12, 20, 25, 30 x 5, 10 busbars, double-T and triple-T section					

System cover, 4-pole

holder set (left + right) for cover sections, 4-pole	1	21.0		01 137	07
front cover section (4-pole), 1.1m long, can only be used with holder no. 01 137	1	58.0		01 599	07
top/bottom cover section, 1.1m long, can only be used with holder no. 01 136 or 01 137	2	27.1		01 555	07
cover section top/bottom, slotted, 1.1m long, can only be used with holder no. 01 136 or 01 137	2	24.5		01 417	07
can be used for systems with 12, 20, 25, 30 x 5, 10 busbars, double-T and triple-T section					

Compartment section, for adjusting the installation depth in double-T and triple-T busbar systems

48mm deep, 2.4m long	1	70.0		01 236	06
76mm deep, 2.4m long	1	105.0		01 237	06
106mm deep, 2.4m long	1	140.0		01 238	06

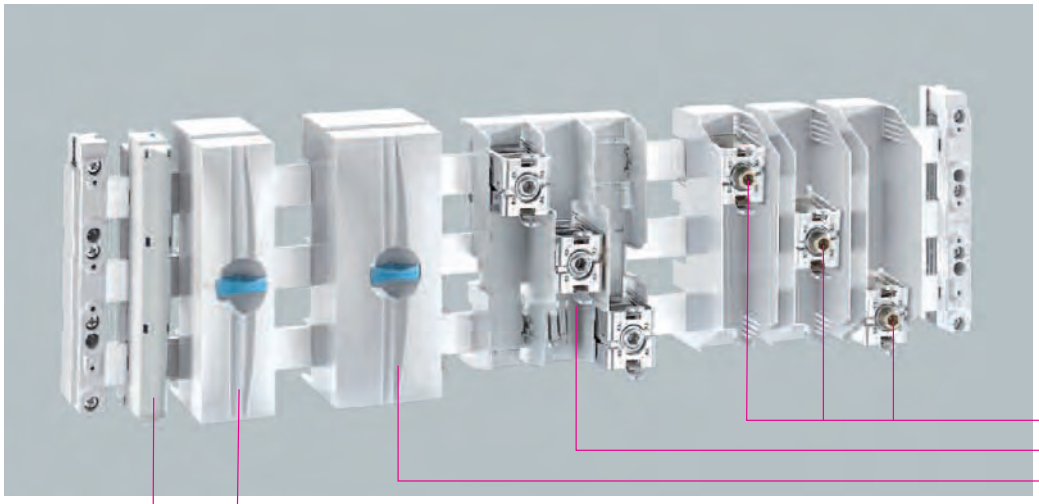

** UL-certified products are highlighted in grey

01 537 **
01 754
01 243
01 240
01 563

CRITO® ProfiLiner, connection module, 3-pole, for 12 x 5 – 30 x 10mm, shock-protected with spring terminals

Connection	Dimensions	For use	Pack size	Weight		Part no.	
	W x H	up to max.		kg/100 units			
1.5 – 16mm²	20 x 200	80A	8	18.1		01 563	07

Connecting terminal plate, 3-pole, for 12 x 5 - 30 x 10 and double-T and triple-T section, **with cover cap**

6 – 50mm², rm, f, f+AE, la. Cu 6 x 9 x 0.8	54 x 200	300A	1	45.1		01 240	07
35 – 120mm², rm, f, f+AE, la. Cu 6/10 x 15.5 x 0.8	81 x 200	440A	1	53.5		01 243	07

Accessories

Type	Pack size	Weight		Part no.	
		kg/100 units			
additional individual cover for the terminals in 01 240	3	0.4		01 300	07
additional individual cover for the terminals in 01 243	3	0.5		01 301	07

Connecting terminal plate, for 20 x 5 – 30 x 10 and double-T and triple-T section, 3-pole, **with cover cap**

Connection	Dimensions	For use	Pack size	Weight		Part no.	
	W x H	up to max.		kg/100 units			
Cu and Al* 95 – 185mm², s(r), s(s), f	135 x 200	460A	1	132.2		01 199	07
Cu and Al* 120 – 300mm², s(r), s(s), f	135 x 200	560A	1	165.7		01 754	07
for fl. Cu up to 32 x 20**	135 x 200	800A	1	144.7		01 753	07

* not maintenance-free when aluminium conductors are used (see page 8/2)
** observe minimum terminal space (see page 8/9)

Connection set, 3-pole, for 20 x 5 – 30 x 10mm and double-T and triple-T section, **without cover cap**

Cu and Al* 120 – 300mm², s(r), s(s), f	153 x 184	560A	1	155.5		01 537	07
flat busbars up to 32 x 20mm	153 x 184	800A	1	132.5		01 538	07

* not maintenance-free when aluminium conductors are used (see page 8/2)

Connection set, 4-pole, for 20 x 5 – 30 x 10mm and double-T and triple-T section, **without cover cap**

Cu and Al* 120 – 300mm², s(r), s(s), f	204 x 224	560A	1	210.0		01 147	07
flat busbars up to 32 x 20mm	204 x 224	800A	1	180.0		01 162	07

* not maintenance-free when aluminium conductors are used (see page 8/2)

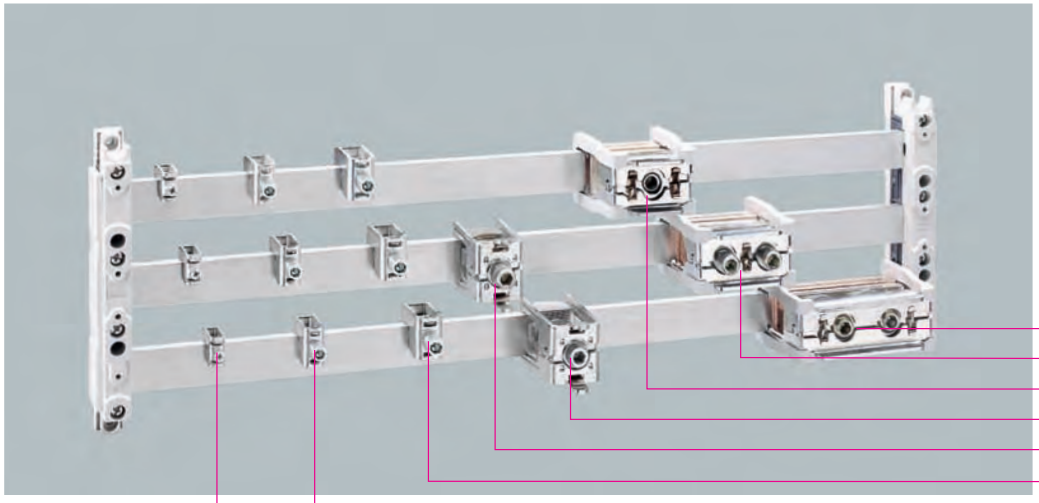

** UL-certified products are highlighted in grey

01 071	**
01 070	
01 069	
01 759	
01 318	
01 292	
01 290	
01 289	

Universal conductor terminal

For busbars	Connection	Terminal space	For use	Pack size	Weight		Part no.	
	mm² min. – max.	W x H	up to max.		kg/100 units			
5mm flat busbars	1.5 – 16	7.5 x 7.5	180A	100	2.1		01 284	07
	4 – 35	10.5 x 11	270A	50	4.6		01 285	07
	16 – 70	14 x 14	400A	25	7.1		01 287	07
	16 – 120	17 x 15	440A	25	10.6		01 068	07
10mm flat busbars	1.5 – 16	7.5 x 7.5	180A	100	2.3		01 289	07
	4 – 35	10.5 x 11	270A	50	4.7		01 290	07
10mm, double-T and triple-T section	16 – 70	14 x 14	400A	25	7.5		01 292	07
	16 – 120	17 x 15	440A	25	10.9		01 203	07

CRITO®ProfiClip, brace terminals

For busbars	Connection	For use	Pack size	Weight		Part no.	
		up to max.		kg/100 units			
20 x 5 – 30 x 10, double-T and triple-T profile	for flat busbars up to 30 x 20	750A	6	30.3		01 319	07
	Cu and Al* 95 – 185mm², s(r), s(s), f	500A	6	31.2		01 318	07
	for flat busbars up to 32 x 20	800A	3	34.7		01 759	07
	Cu and Al* 120 – 300mm², s(r), s(s), f	600A	3	42.5		01 760	07
* not maintenance-free when aluminium conductors are used (see page 8/2)							

CRITO®PowerClip, brace terminal for the connection of flat and flexible copper busbars

For busbars	Terminal space	Applicable	Pack size	Weight		Part no.	
	W x H	up to max.		kg/100 unit			
30 x 10, double-T and triple-T profile	55 x 28	1600A/2000A*	3	50.0		01 069	07
	68 x 28	1600A/2000A*	3	63.0		01 070	07
	105 x 28	1600A/2800A*	3	84.0		01 071	07
* in case of centre feed							

Cover cap, 3-pole, can also be used as reserve section cover

Type	For busbars	Pack size	Weight		Part no.	
	W x H x D		kg/100 units			
54 x 200 x 55	12 x 5 – 30 x 10, double-T and triple-T section	1	14.7		01 590	07
84 x 200 x 55	12 x 5 – 30 x 10, double-T and triple-T section	10	14.9		01 413	07
135 x 200 x 90	20 x 5 – 30 x 10, double-T and triple-T section	1	29.5		01 756	07
180 x 200 x 90	12 x 5 – 30 x 10, double-T and triple-T section	1	33.0		01 539	07
228 x 200 x 90	12 x 5 – 30 x 10, double-T and triple-T section	1	37.3		01 596	07
250 x 200 x 90	12 x 5 – 30 x 10, double-T and triple-T section	1	39.3		01 540	07
270 x 200 x 90	20 x 5 – 30 x 10, double-T and triple-T section	1	64.7		01 757	07

Cover cap, 4-pole, can also be used as reserve section cover

228 x 260 x 90	12 x 5 – 30 x 10, double-T and triple-T section	1	45.0		01 597	07

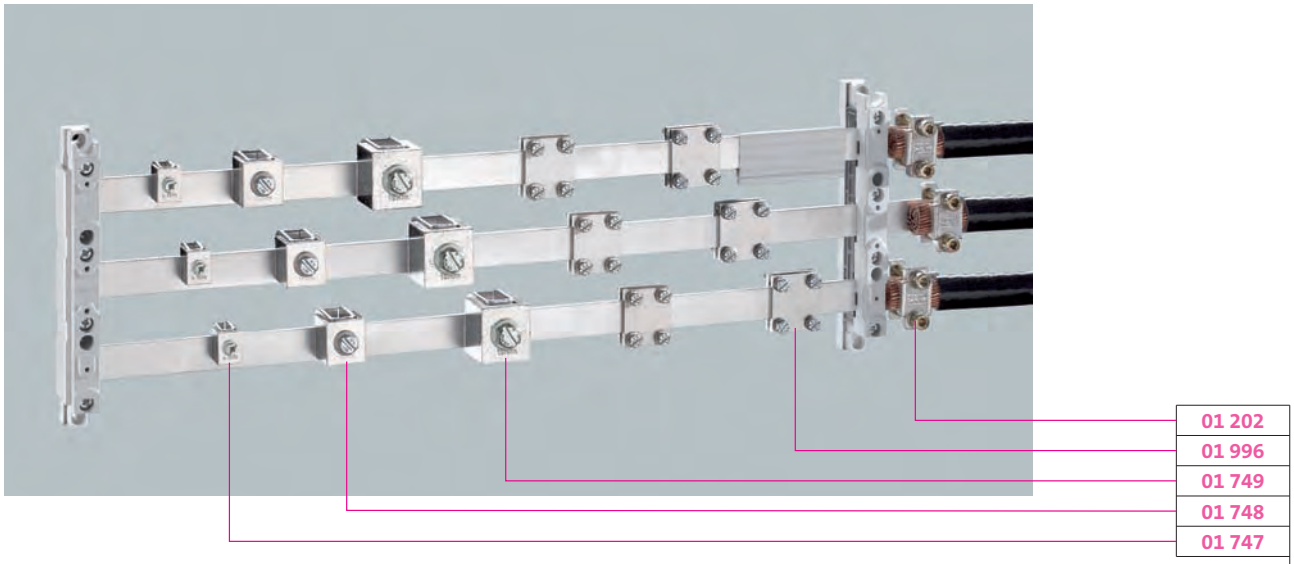

Screw-type terminal, clip-on, for cable lug DIN 46 234

Type		For use	Pack size	Weight		Part no.	
		up to max.		kg/100 units			
undrilled flat busbars, 5mm thick	M 5 x 8	360A	25	4.8		01 747	07
	M 8 x 8	490A	20	16.0		01 748	07
	M 10 x 10	630A	6	35.8		01 749	07
undrilled flat busbars, 10mm thick	M 5 x 8	360A	25	5.0		01 512	07
undrilled flat busbars, 10mm thick and double-T and triple-T section	M 8 x 8	490A	20	16.5		01 514	07
	M 10 x 10	630A	6	36.2		01 047	07

Busbar connector, to connect flat busbars and flexible Cu

Terminal space	Terminal space	Pack size	Weight		Part no.	
W x L	max. height		kg/100 units			
25 x 20	20	10	14.9		01 996	07
30 x 20	20	10	16.2		01 997	07
30 x 30	20	10	19.8		01 586	07
35 x 30	20	10	21.5		01 587	07
40 x 20	20	10	17.8		01 206	07
40 x 32	20	6	27.6		01 616	07

Busbar connection, along busbar length with wedge clamp terminal

Busbars	Connection	Terminal space	Pack size	Weight		Part no.	
	mm² min. – max.	W x H		kg/100 units			
15 x 5	70 – 150	18 x 4 – 18	3	5.9		01 200	07
20 x 5 – 10	120 – 240	21 x 4 – 20	3	11.0		01 201	07
25 x 5	150 – 300	25 x 5 – 20	3	13.4		01 202	07
30 x 10 and double-T and triple-T profile	la. Cu 4 x 24 x 1 – 10 x 32 x 1	32 x 1 – 15	3	50.0		01 069	07

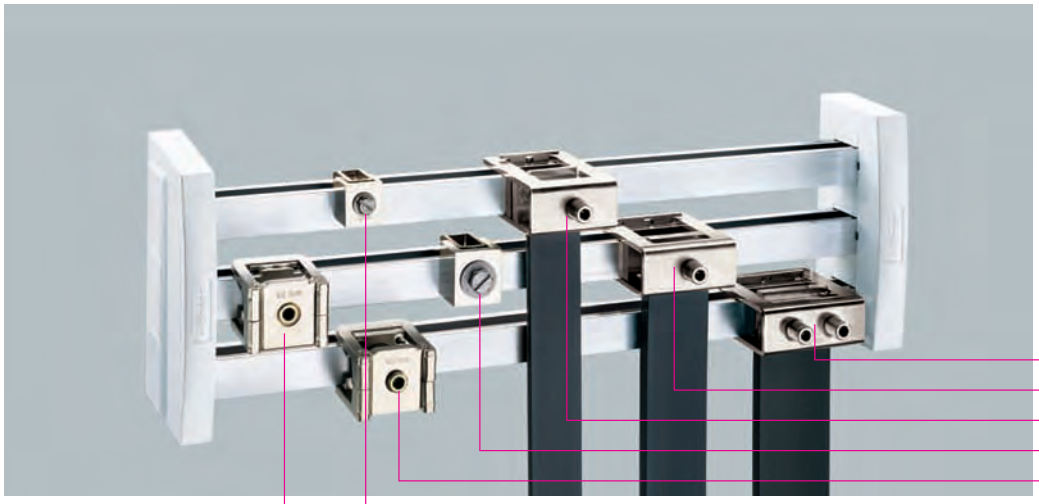

** UL-certified products are highlighted in grey

01 907	**
01 906	
01 185	
01 047	
01 092	
01 514	
01 094	

Profile terminal, for double-T section bars

Connection cross-section	Terminal space	For use	Pack size	Weight		Part no.	
	W x H	up to max.		kg/100 units			
320 – 800mm²	41 x 20 – 42	1600A	3	67.0		01 185	07
500 – 750mm²	51 x 5 – 28	1600A	3	70.5		01 906	07
600 – 900mm²	64 x 5 – 28	1600A	3	84.0		01 907	07
500 – 1000mm²	51 x 20 – 42	1600A / 2000A*	3	73.5		01 936	07
600 – 1200mm²	64 x 20 – 42	1600A / 2000A*	3	85.9		01 911	07
800 – 1600mm²	81 x 20 – 42	1600A / 2500A*	3	101.1		01 934	07
1000 – 2000mm²	101 x 20 – 42	1600A / 2800A*	3	113.7		01 935	07
for connecting flat busbars and flexible copper busbars							
* for centre feeding							

Profile terminal, for triple-T section busbars

320 – 800mm²	41 x 23 – 45	1600A	3	105.0		01 513	07
500 – 1260mm²	64 x 23 – 45	2500A	3	124.0		01 008	07
1200 – 3600mm²	101 x 23 – 45	3200A	3	172.7		01 186	07

CRITO®PowerClip, brace terminal for busbars 30 x 10 and section busbars

Busbars	Terminal space	For use	Pack size	Weight		Part no.	
	W x H	up to max.		kg/100 units			
30 x 10, double-T and triple-T profile	55 x 28	1600A/2000A*	3	50.0		01 069	07
	68 x 28	1600A/2000A*	3	63.0		01 070	07
	105 x 28	1600A/2800A*	3	84.0		01 071	07
for the connection of flat and flexible copper busbars							
* in case of centre feed							

Connection terminal

Busbars		For use	Pack size	Weight		Part no.	
		up to max.		kg/100 units			
30 x 10, double-T and triple-T section	95 – 300mm², sol(r), s(r), sol(s), s(s), f	630A	3	85.7		01 094	07
	for flat busbars up to 40 x 25	1250A	3	81.7		01 092	07

Flexible copper busbar, Cu plain, insulated, length 2m

Dimensions	Rated current	Cross section	Pack size	Weight		Part no.	
	50k	mm²		kg/100 units			
10 x 40 x 1	1053A	400	1	712.0		01 615	06
10 x 50 x 1	1244A	500	1	890.0		01 509	06
10 x 63 x 1	1481A	630	1	1121.4		01 510	06
10 x 80 x 1	1777A	800	1	1424.0		01 061	06
10 x 100 x 1	2110A	1000	1	1780.0		01 273	06
for additional cross sections see page 7/5 and 7/6							

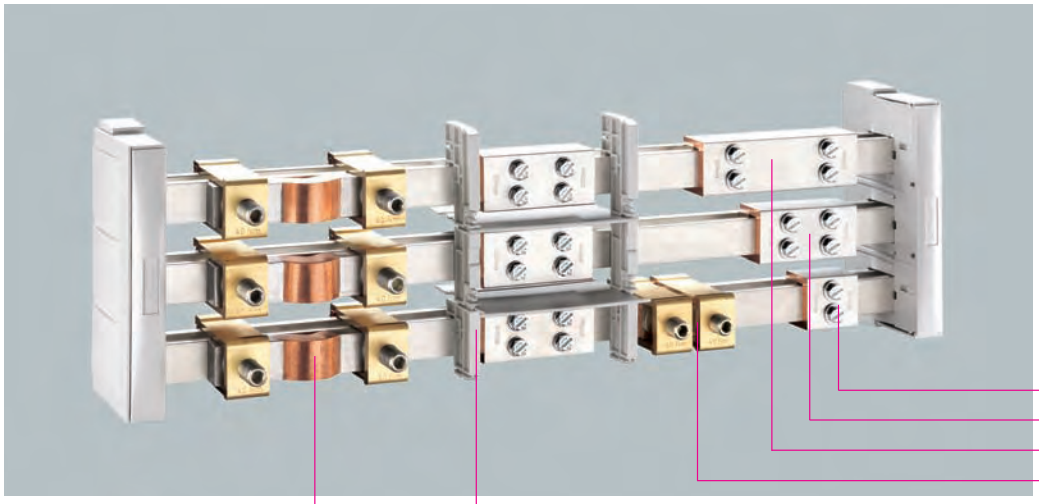

wöhner UL 508 certified products

** UL-certified products are highlighted in grey

01 827	**
01 145	
01 829	
01 905	
01 361	
30 322	

Busbar connector, for same-size busbars

Busbars	Length	System spacing	For use	Pack size	Weight		Part no.	
			up to max.		kg/100 units			
12 – 20 x 5 / 10	55	5 – 10	630A	12	19.2		01 166	07
	150	100 – 110	630A	3	52.4		01 193	07
20 – 30 x 5 / 10	40	9 – 20	630A	6	23.3		01 990	07
	40	13 – 20	630A	6	25.2		01 823	07
	95	50 – 60	630A	3	54.4		01 141	07
	150	100 – 110	630A	3	86.6		01 886	07
double-T section	50	9 – 20	1600A	6	49.4		01 827	07
	95	50 – 60	1600A	3	94.3		01 145	07
	150	100 – 110	1600A	3	146.1		01 829	07
	70	5 – 10	1600A	3	113.9		01 905	07
triple-T section	95	50 – 60	2500A	3	120.6		01 274	07
	150	100 – 110	2500A	3	178.0		01 275	07
3 units required for a 3-pole connection, use 01 026 or 01 320 and 01 025 as a cover (see page 2/5)								

Connection set, 3-pole, for double-T or triple-T section busbars

Type		For use	Pack size	Weight		Part no.	
		up to max.		kg/100 units			
for a flexible connection	double-T section	1600A	1	536.0		30 322	07
for a flexible corner coupling	double-T section	1600A	1	638.0		30 473	07
for a flexible connection	triple-T section	2500A	1	940.0		01 295	07
one set is required for a 3-pole connection							

Phase separators for UL installation of end-to-end busbar connections, 3-pole

Type	Width	Pack size	Weight		Part no.	
	mm		kg/100 units			
for parts 01 166, 01 990, 01 823, 01 827*	105	1	17.2		01 360	06
for parts 01 141, 01 145, 01 274*	145	1	19.6		01 361	06
for parts 01 193, 01 886, 01 829, 01 275	200	1	21.8		01 362	06
* each depth dimension has to be cut to size						

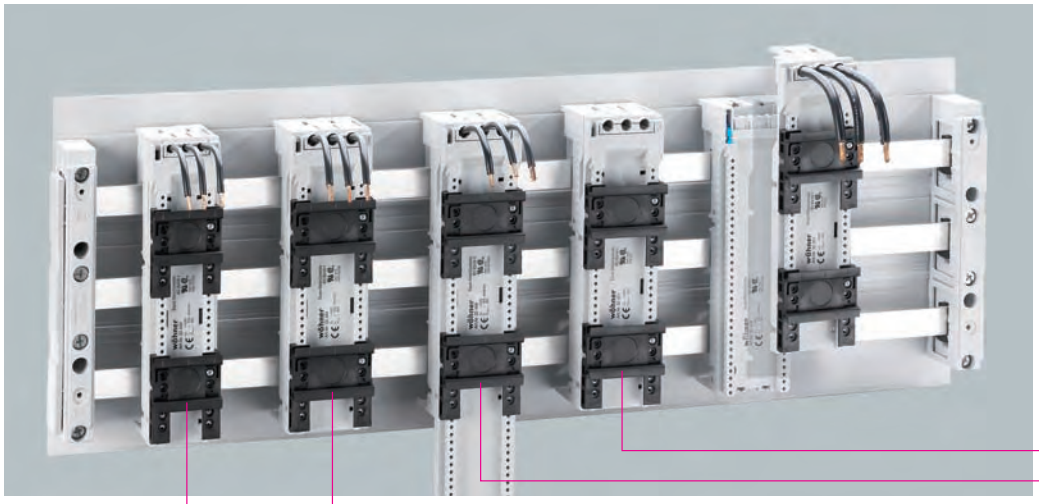

wöhner UL 508 certified products

** UL-certified products are highlighted in grey

32 421 **
32 416
32 404
32 400

EQUES®MotorController

with removable upper section. Base remains shock-protected on the busbar system.

EQUES®MotorController 25A, busbar adapter, **separable**, with AWG 12 ≙ 4 mm² wires

Type	Adapter width	Adapter length	Pack size	Weigth kg/100 units		Part no.	
16A, 2 mounting rails, conductors 2.5mm², 125 long	45	200	4	42.7		32 401	05
2 mounting rails	45	200	4	42.7		32 400	05
2 mounting rails	45	260	4	45.0		32 402	05

EQUES®MotorController 32A, busbar adapter, **separable**, with AWG 10 ≙ 6 mm² wires

2 mounting rails	54	200	4	49.2		32 404	05
2 mounting rails	54	260	4	54.4		32 408	05

EQUES®MotorController 45A, busbar adapter, **separable**, with AWG 8 ≙ 10mm² wires

2 mounting rails	54	200	4	52.9		32 412	05
2 mounting rails	54	260	4	56.7		32 416	05

EQUES®MotorController empty, busbar adapter, **separable**, without electrical contact

2 mounting rails	45	200	4	34.9		32 420	05
2 mounting rails	54	200	4	38.8		32 421	05
2 mounting rails	45	260	4	36.2		32 425	05
2 mounting rails	54	260	4	42.1		32 426	05
side-mounted module, connectable on both sides	9	200	10	4.3		32 964	05

Microswitch, to interrupt the coil current

1 break contact, 250 V, 5A for EQUES®MotorController			10	0.9		32 956	05

All adapters for busbars 12, 15, 20, 25, 30mm x 5, 10mm, double-T and triple-T section

Accessories EQUES®Technology

mounting rail	45		10	1.4		32 947	05
mounting rail	54		10	1.5		32 948	05
mounting rail	63		10	1.8		32 949	05
mounting rail	72		10	2.0		32 950	05
mounting rail	81		10	2.1		32 951	05
mounting rail end stop			50	0.1		32 969	05
connecting element			50	0.1		32 954	05
connector with support 8-pole, 2,5mm², 250 V	45		10	3.4		32 511	05
connector with support 10-pole, 2,5mm², 250 V	54		10	4.0		32 513	05

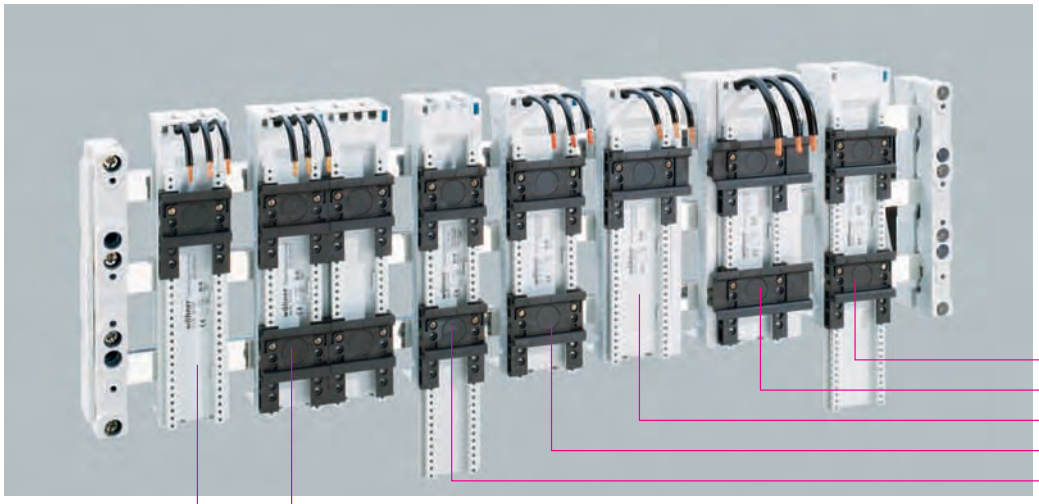

** UL-certified products are highlighted in grey

32 472 **
32 459
32 443
32 442
32 439
32 432
32 430

EQUES®EasyConnector

EQUES®EasyConnector 25A, busbar adapter with leads AWG 12 ≙ 4mm²

Type	Adapter width	Adapter length	Pack size	Weight kg/100 units		Part no.	
1 mounting rail	45	200	4	32.5		32 430	05
2 mounting rails	45	200	4	32.6		32 431	05
2 mounting rails	90	200	2	57.1		32 432	05
2 mounting rails	45	260	4	35.7		32 433	05

EQUES®EasyConnector 25A, busbar adapter, with 6mm² terminals, without leads

2 mounting rails	45	200	4	32.2		32 436	05
2 mounting rails	45	260	4	35.2		32 439	05
UL terminal cap for 32 436 and 32 439	45		4	0.7		32 973	05

EQUES®EasyConnector 32A, busbar adapter with leads AWG 10 ≙ 6mm²

1 mounting rail	54	200	4	36.6		32 441	05
2 mounting rails	54	200	4	38.0		32 442	05
1 mounting rail	63	200	4	44.5		32 443	05
1 mounting rail	72	200	4	44.3		32 444	05
2 mounting rails	81	200	4	49.5		32 446	05
2 mounting rails	54	260	4	43.3		32 449	05

EQUES®EasyConnector 63A, busbar adapter with leads AWG 8 ≙ 10mm²

1 mounting rail	54	200	4	39.2		32 454	05
2 mounting rails	54	200	4	41.0		32 455	05
1 mounting rail	63	200	4	44.9		32 456	05
1 mounting rail	72	200	4	47.6		32 457	05
2 mounting rails	81	200	4	51.3		32 459	05
2 mounting rails	54	260	4	43.0		32 461	05

EQUES®EasyConnector 80A, busbar adapter, with 16mm² terminals, without leads

1 mounting rail	54	200	4	37.3		32 466	05
2 mounting rails	54	200	4	38.9		32 467	05
1 mounting rail	72	200	4	45.0		32 469	05
2 mounting rails	54	260	4	43.8		32 472	05
UL terminal cap for 32 466, 32 467, 32 469 and 32 472	54		4	0.8		32 974	05

PE/N module, with 16mm² terminals, top and bottom

for EEC adapters, connectable on both sides	18	242	4	14.1		32 146	05

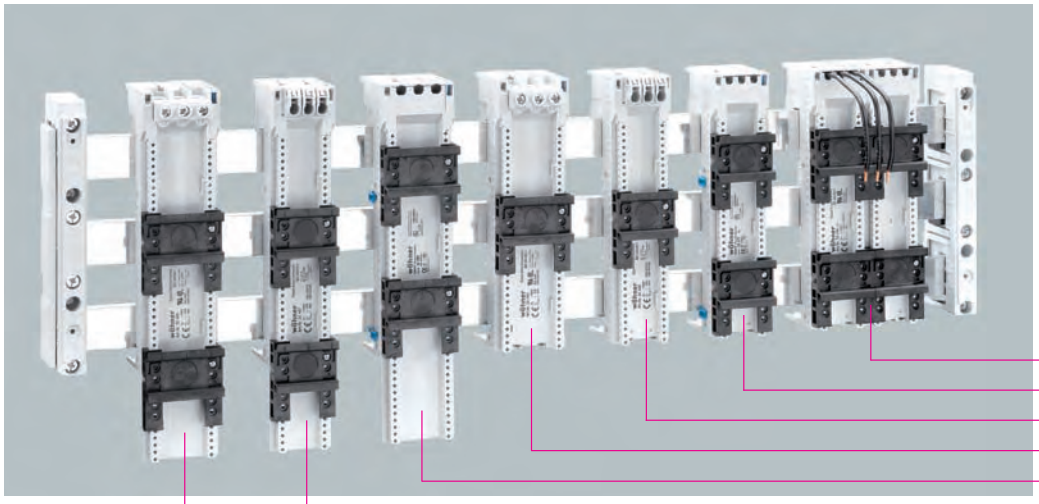

wöhner UL 508 certified products

** UL-certified products are highlighted in grey

32 440
32 477 **
32 486
32 464
32 485
32 487
32 465

EQUES®EasyConnector

Type	Mounting rails	Adapter width	Adapter length	Pack size	Weight kg/100 units		Part no.	
32A, special type with spring terminals 1.5–6mm² at front	1	45	200	4	32.5		32 486	05
32A, special type with spring terminals 1.5–6mm² at front	2	45	260	4	35.5		32 487	05
80A, special type with spring terminals 1.5–16mm² at front	1	54	200	4	37.3		32 464	05
80A, special type with spring terminals 1.5–16mm² at front	2	54	260	4	41.2		32 465	05

EQUES®EasyConnector empty, busbar adapter without electrical contacts

universal	2	45	200	4	24.8		32 477	05
universal	2	54	200	4	27.7		32 478	05
universal	2	45	260	4	27.9		32 484	05
universal	2	54	260	4	38.5		32 485	05
side-mounted module, connectable on both sides		9	200	10	2.3		32 963	05

EQUES®EasyConnector 16A, busbar adapter with leads AWG 14 ≙ 2.5mm²

for switchgear with spring terminals direct starter/changeover starter AB 140M-RC2E, Moeller PKZM0, Siemens S00, Telemecanique GV2	2	45	200	4	31.0		32 429	05
	2	90	200	2	57.0		32 440	05

Accessories EQUES®Technology

mounting rail		45		10	1.4		32 947	05
mounting rail		54		10	1.5		32 948	05
mounting rail		63		10	1.8		32 949	05
mounting rail		72		10	2.0		32 950	05
mounting rail		81		10	2.1		32 951	05
mounting rail end stop				50	0.1		32 969	05
connecting element				50	0.1		32 954	05
connector with support 8-pole, 2.5mm², 250 V		45		10	3.4		32 511	05
connector with support 10-pole, 2.5mm², 250 V		54		10	4.0		32 513	05

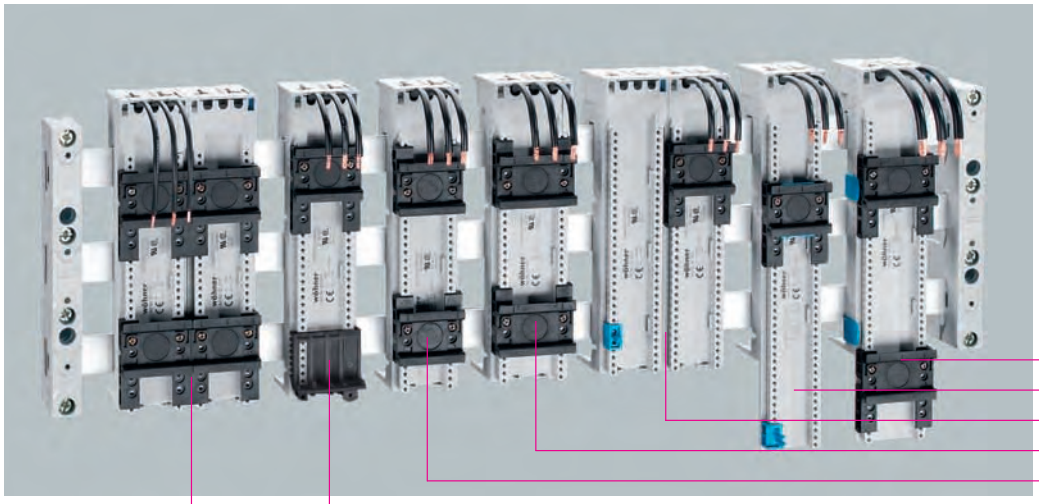

wöhner UL 508 certified products

** UL-certified products are highlighted in grey

32 460 **
32 428
32 448
32 534
32 533
32 450
32 440

EQUES®EasyConnector 25A*, busbar adapter with leads AWG 12 ≙ 4mm²

Type	Mounting rails	Adapter width	Adapter length	Pack size	Weight kg/100 units		Part no.	
direct starter Allen-Bradley 140A, 140MC/D	2	45	200	4	32.5		32 533	05
direct starter Allen-Bradley 140A, 140MC/D	2	54	200	4	38.0		32 534	05
direct starter Moeller PKZM0/BG1	1	45	200	4	33.0		32 450	05
changeover starter Moeller PKZM0/BG1	1	90	200	2	54.6		32 452	05
direct starter Siemens S00, screw connection	1	45	200	4	33.0		32 445	05
direct starter Siemens S00, spring terminals	1	45	260	4	42.0		32 637	05
changeover starter Siemens S00, screw connection	1	90	200	2	54.1		32 448	05

EQUES®EasyConnector 32A*, busbar adapter with leads AWG 10 ≙ 6mm²

direct starter Moeller PKZM0/BG2	2	45	200	4	36.4		32 451	05
changeover starter Moeller PKZM0/BG2	2	90	200	2	61.2		32 453	05
direct starter Telemecanique GV2-M/P	2	45	200	4	33.3		32 434	05
direct starter Telemecanique GV2-M/P	2	45	260	4	36.2		32 438	05
direct starter Telemecanique LUB12/32	1	45	200	4	32.2		32 427	05
changeover starter Telemecanique LU2B12/32	1	45	260	4	35.1		32 428	05
direct starter Siemens S0, S00, screw connection	1	45	260	4	35.0		32 639	05
direct starter Siemens S0, S00, spring terminals	1	45	260	4	44.0		32 638	05
direct starter Siemens 3RA6	1	45	200	4	44.0		32 588	05

EQUES®EasyConnector 63A*, busbar adapter with leads AWG 8 ≙ 10mm²

direct starter ABB MS45x, Moeller PKZM4, Siemens S2	2	55	260	4	43.2		32 460	05
direct starter Allen-Bradley 140M-F	2	54	200	4	43.0		32 535	05
direct starter ABB MS45x, Moeller PKZ2	2	72	260	4	51.4		32 463	05

* These special adaptors differ from the universal model EQUES®EasyConnector busbar adaptors in terms of mounting rail spacing or additional parts and additional approvals.

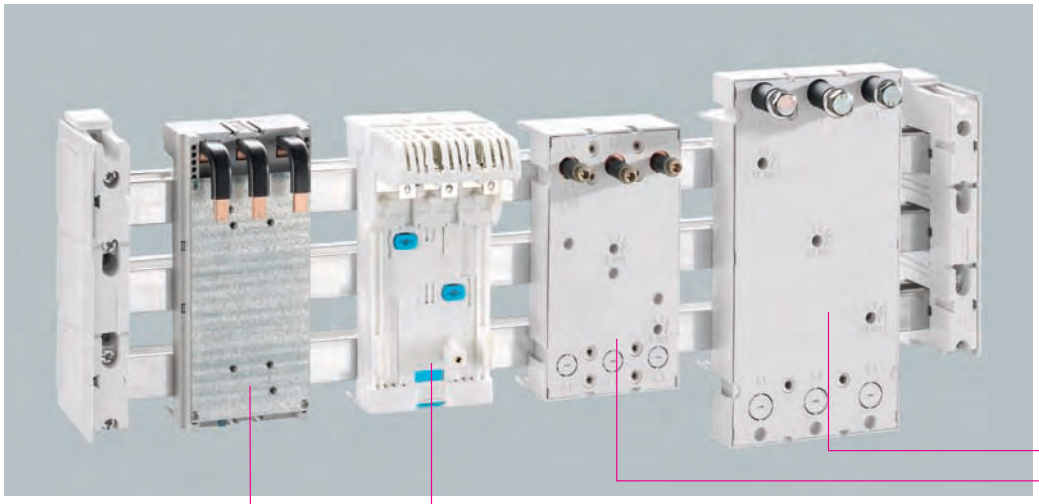

** UL-certified products are highlighted in grey

32 157 **
32 140
32 570
32 575

EQUES®PowerConnector

EQUES®PowerConnector, 3-pole busbar adapter, phase division 23–30mm, connection top

Type	Adapter length	Adapter width	Pack size	Weight kg/100 units		Part no.	
160A for ABB Tmax T1, GE FD160, Schneider Electric NS 80	200	90	1	81.0		32 575	05
125A for Allen-Bradley 140-CMN	200	90	1	81.0		32 549	05
160A for Moeller NZM1, CrossLink® Technology	200	90	1	81.0		32 570	05
100A for Siemens S3, ABB MS49x	200	72	1	66.5		32 981	05

EQUES®PowerConnector, 3-pole busbar adapter, phase division 35–36mm

290A for ABB Tmax T4, connection top	240	105	1	122.6		32 601	05
250A for Allen-Bradley 140U-J	192	106	1	90.0		32 137	05
250A for Schneider Electric NSX100–NSX250, GV7	192	106	1	93.8		32 156	05
250A for Moeller NZM2-XKR4	192	106	1	90.1		32 140	05
160A for Siemens 3VL1 UL	192	106	1	95.3		32 976	05
250A for Siemens 3VL2, 3VL3 UL	192	106	1	95.3		32 977	05
250A for Siemens 3VT250	240	105	1	102.0		32 651	05
225A for Terasaki S250-NJ, connection top	240	105	1	102.0		32 592	05

EQUES®PowerConnector, 3-pole busbar adapter, phase division 43–45mm

580A for ABB Tmax T5	300	140	1	252.7		32 593	05
600A for Allen-Bradley 140U-K, -L	272	140	1	212.0		32 138	05
570A for Schneider Electric NSX400, NSX630	272	140	1	222.6		32 157	05
630A for Moeller NZM3-XKR13O	300	140	1	255.7		32 978	05
400A for Siemens 3VL4	295	140	1	222.4		32 975	05
600A for Siemens 3VT630	300	140	1	250.0		32 641	05

EQUES®PowerConnector, 3-pole busbar adapter, phase division 63mm, connection top

580A for Siemens 3VL5 connection top	325	184	1	276.0		32 980	05

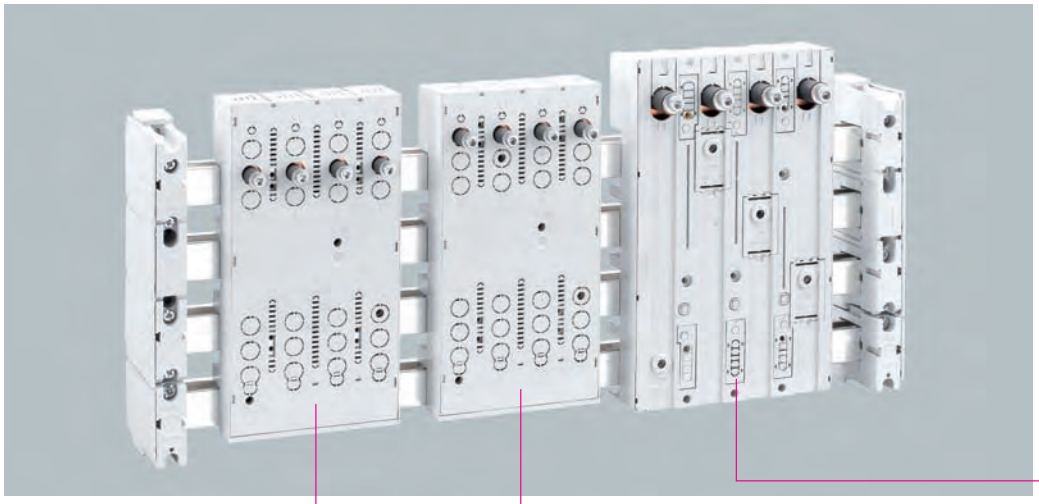

32 583
32 580
32 578

EQUES®PowerConnector

EQUES®PowerConnector, busbar adapter, 4-pole, phase division 35–36mm, connection top

Type	Adapter length	Adapter width	Pack size	Weight kg/100 units		Part no.	
250A for ABB Tmax T4	270	140	1	180.0		**32 584**	05
250A for Schneider Electric NSX100–NSX250	270	140	1	180.0		**32 582**	05
250A for Moeller NZM2-XKR4	270	140	1	180.0		**32 580**	05
250A for Siemens 3VL2, 3VL3	270	140	1	180.0		**32 578**	05
connection of switch to busbar system at top							

EQUES®PowerConnector, busbar adapter, 4-pole, phase division 43–45mm, connection top

500A for ABB Tmax T5	300	185	1	360.0		**32 585**	05
500A for Schneider Electric NSX400, NSX630	300	185	1	350.0		**32 583**	05
500A for Moeller NZM3-XKR13O	300	185	1	350.0		**32 581**	05
500A for Siemens 3VL400	300	185	1	350.0		**32 579**	05
connection of switch to busbar system at top							

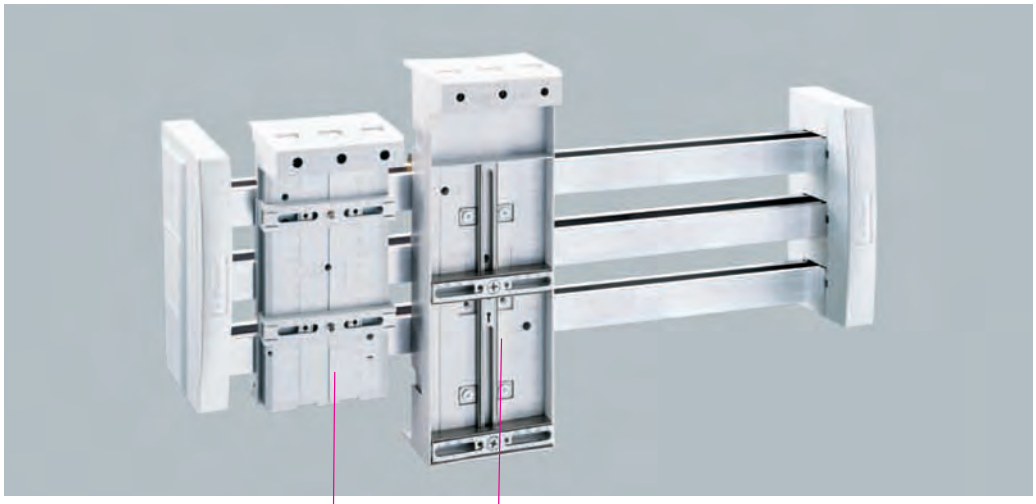

32 168
32 214

Universal busbar adapter

Type	Adapter length	Adapter width	Pack size	Weight kg/100 units		Part no.	
200A top connection to system	222	108	1	84.2		32 214	05
200A bottom connection to system	222	108	1	86.0		32 215	05
250A top connection to system	320	110	1	160.4		32 168	05
250A bottom connection to system	320	110	1	164.0		32 216	05
for all commercially available switchgear with M4 fixing screws (see accessories for M5 and M6 screws)							

Accessories for universal busbar adapters

M5 slide nut for 32 214, 32 215, 32 168 and 32 216			4	0.4		32 937	05
M6 slide nut for 32 214, 32 215, 32 168 and 32 216			4	0.4		32 938	05

Busbar adapter 630A

screw M10 top or bottom	320	184	1	278.0		32 004	05
metal accessory plate	320	184	1	95.2		32 910	05
metal accessory plate, without drillings	315	180	1	95.5		32 911	05

All adapters for busbars 12 – 30 x 5 – 10mm, double-T and triple-T section.

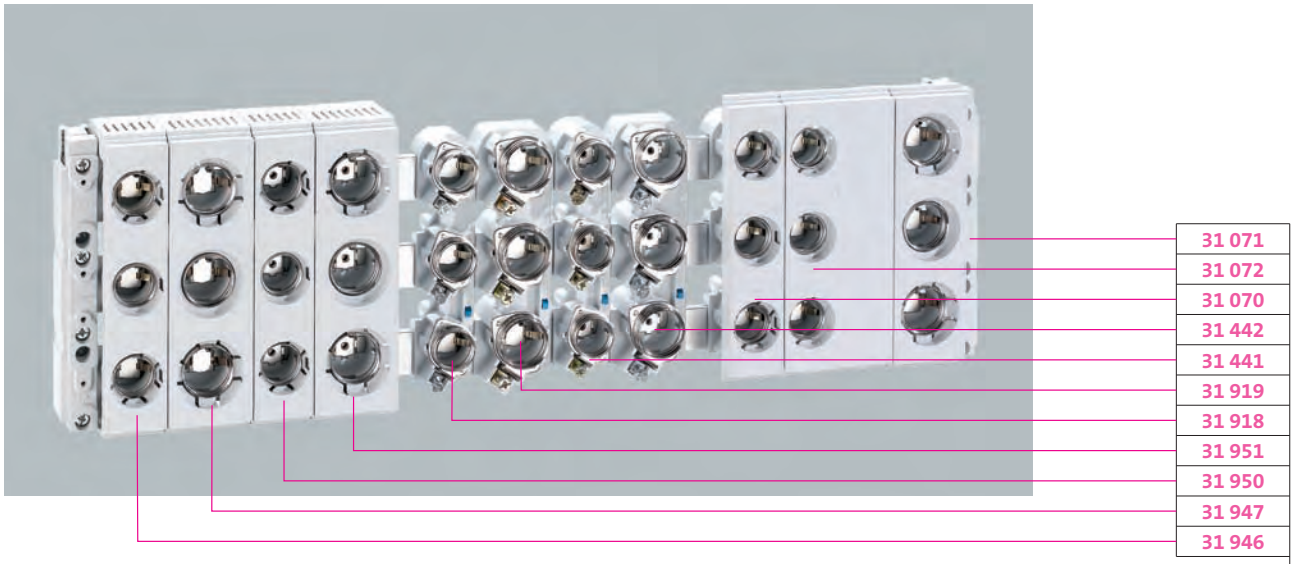

CUSTO®EasyLiner, D bus-mounting fuse base **shock-protected** with strip cover, for gauge ring

Busbars	Thread / Rated current / Rated voltage	Base width	Pack size	Weight kg/100 units		Part no.	
5, 10 and double-T section	E 27 / 25A / 500V	42	8	29.7		31 946	01
	E 33 / 63A / 500V	57	6	39.8		31 947	01

CUSTO®EasyLiner, D bus-mounting fuse base **shock-protected** with strip cover, for gauge screw

5, 10 and double-T section	E 27 / 25A / 500V	42	8	28.7		31 950	01
	E 33 / 63A / 500V*	57	6	38.7		31 951	01

D bus-mounting fuse base, for gauge ring

5, 10 and double-T section	E 27 / 25 A / 500 V	42	10	23.3		31 918	01
	E 33 / 63 A / 500 V	57	10	32.0		31 919	01

D bus-mounting fuse base, for gauge screw

5, 10 and double-T section	E 27 / 25A / 500V	42	10	22.3		31 441	01
	E 33 / 63A / 500V*	57	10	30.9		31 442	01

D strip cover

E 27		42	10	4.9		31 070	01
E 33		57	10	6.2		31 071	01
E 27		84	5	8.4		31 072	01
E 33		114	5	10.8		31 073	01

Shock protection, for all strip covers

Type	Pack size	Weight kg/100 units		Part no.	
clips onto side	10	1.3		79 663	01

Label

self-adhesive labels (108 pieces per A5 sheet)	1	0.4		78 801	02

* as per DIN VDE 0636-3011 also 690V AC/600 V DC

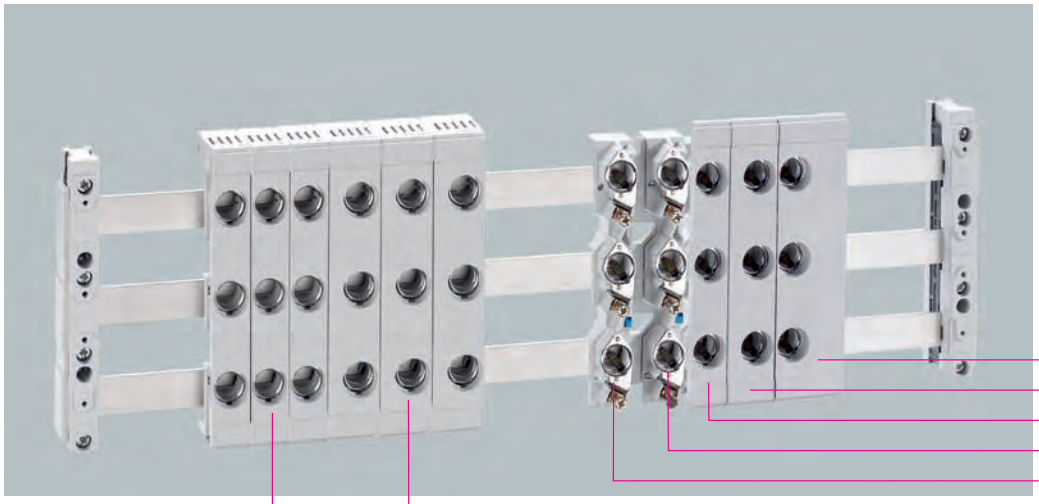

CUSTO®EasyLiner, D0 bus-mounting fuse base **shock-protected** with strip cover, for gauge ring

Busbars	Thread / Rated current / Rated voltage	Base width	Pack size	Weight kg/100 units		Part no.	
5, 10 and double-T section	E 18 / 63A / 400V*	27	8	14.4		31 935	01
	E 18 / 63A / 400V	36	6	16.1		31 936	01
* 36mm wide type provides good lead placement and heat dissipation							

D0 bus-mounting fuse base, for gauge ring

5, 10 and double-T section	E 18 / 63A / 400V*	27	10	14.7		01 647	01
	E 18 / 63A / 400V	36	10	15.5		01 498	01
* 36mm wide type provides good lead placement and heat dissipation							

D0 strip cover

E 18	27	10	2.6		01 980	01
E 18	36	10	3.1		01 424	01
E 18	54	10	4.0		01 981	01

Shock protection, for all strip covers

Type	Pack size	Weight kg/100 units		Part no.	
clips onto side	10	1.3		79 663	01

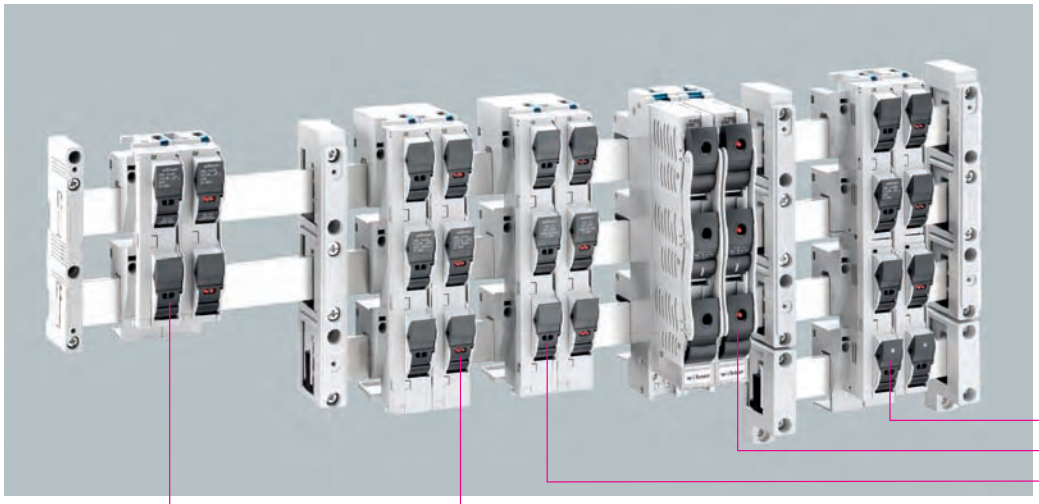

UL-certified products are highlighted in grey

31 963
31 525
31 958
31 955
31 961

SECUR®PowerLiner, bus-mounting switch disconnectors with fuses, 3-pole, 3-pole switching*

Type	Rated current/ Rated voltage	Pack size	Weight kg/100 units		Part no.	
for D01 and D02 fuses**	63A / 400V*	1	75.9		**31 158**	01
for 10 x 38mm NFC cylindrical fuses IEC 60 269-2	32A / 690V*	1	76.0		**31 232**	01

* Can be converted to 1-pole switching.
** The use of side-mounted module 31 901 is recommended for continuous loads above 35A. Please observe DIN EN 60 439-1 table 1.

SECUR®PowerLiner, bus-mounting switch disconnectors with fuses, **with LED,** 3-pole, 3-pole switching

for D01 and D02 fuses**	63A / 400V*	1	76.5		**31 525**	01

* Can be converted to 1-pole switching.
** The use of side-mounted module 31 901 is recommended for continuous loads above 35A. Please observe DIN EN 60 439-1 table 1.

Accessories, for SECUR®PowerLiner

pilot switch		1	0.7		**31 903**	01
9mm wide side-mounted module		5	6.1		**31 901**	01
D02 reducer for D01 fuses 2–16A		20	0.1		**31 902**	01

AMBUS®EasyLiner, bus-mounting fuse base for cylindrical fuses, 3-pole, 3-pole isolating, with spring terminals

for 10 x 38mm fuses IEC 60 269-2	32A / 690V	4	18.5		**31 954**	01
for 10 x 38mm fuses IEC 60 269-2 with LED 110 – 690V AC/DC	32A / 690V	4	18.7		**31 955**	01
for Class CC fuses UL 248-4	30A / 600V	4	18.6		**31 958**	01
for Class CC fuses UL 248-4, with LED 110 – 600V AC/DC	30A / 600V	4	18.8		**31 959**	01

AMBUS®EasyLiner, bus-mounting fuse base, **3-pole + N**, 4-pole isolating, with spring terminals

for 10 x 38mm fuses IEC 60 269-2	32A / 690V	4	25.2		**31 963**	01
for 10 x 38mm fuses IEC 60 269-2 with LED 110 – 690V AC/DC	32A / 690V	4	25.2		**31 964**	01

AMBUS®EasyLiner, bus-mounting fuse base, **2-pole**, 2-pole isolating, with spring terminals

for 10 x 38mm fuses IEC 60 269-2	32A / 690V	6	12.2		**31 961**	01
for 10 x 38mm fuses IEC 60 269-2 with LED 110 – 690V AC/DC	32A / 690V	6	12.2		**31 962**	01
for 10 x 38mm fuses IEC 60 269-6	32A / 1000V DC	6	12.2		**31 956**	01
for 10 x 38mm fuses IEC 60 269-6 with LED 400 – 1000V DC	32A / 1000V DC	6	12.2		**31 960**	01

Fuses are not included in delivery.

UL-certified products are highlighted in grey

CrossLink® TECHNOLOGY

33 324
33 198
33 402
03 199
32 594

CrossLink® Technology, module width 106

QUADRON® CrossLinkCarrier NH, bus-mounting fuse base, bottom/top connection, 3-pole

Type	Rated current	Size	Pack size	Weight kg/100 units		Part no.	
box terminal	160A	00	1	87.0		03 199	10
connection screw M8	160A	00	1	87.0		03 299	10
with shock protection, without grip lug covers; more NH bus-mounting fuse base see page 2/30, 4/3							

QUADRON® CrossLinkCarrier Class J, bus-mounting fuse base, bottom/top connection, 3-pole

box terminal AWG 14-2/0 str*	30A	21 x 57	1	138.0		33 421	16
box terminal AWG 14-2/0 str*	60A	27 x 60	1	135.0		33 422	16
box terminal AWG 14-2/0 str	100A	29 x 117	1	129.0		33 402	16

QUADRON® CrossLinkBreaker NH, bus-mounting fuse switch disconnector, bottom/top connection, 3-pole

box terminal	160A	00	1	100.0		33 198	09
connection screw M8	160A	00	1	100.0		33 398	09
box terminal, electronic fuse monitoring	160A	00	1	117.0		33 324	09
connection screw M8*, electronic fuse monitoring	160A	00	1	117.0		33 394	09
box terminal, electronic fuse monitoring	160A	00	1	180.0		33 206	09
connection screw M8, electronic fuse monitoring	160A	00	1	180.0		33 420	09

QUADRON® CrossLinkAdapter, busbar adapter, 3-pole, phase division 33mm

Type	Adapter length	Adapter width	Pack size	Weight kg/100 units		Part no.	
for system components with module width 106mm; to be used as spare slot mounting, busbar cover	200	106	2	36.5		32 594	09

Devices can be fastened directly on busbars 12, 15, 20, 25, 30 x 5, 10mm, double-T and triple-T section.

* Delivery date on request

CrossLink® TECHNOLOGY

CrossLink® Technology, module width 106

QUADRON® CrossLinkSwitch NH, bus-mounting switch disconnector with fuses, 3-pole, **with multifunctional handle** (spring-controlled)

Type	Rated current	Size	Pack size	Weight kg/100 units		Part no.	
connection at bottom, box terminal	125A	00	1	219.0		33 500	15
connection at top, box terminal	125A	00	1	219.0		33 501	15
connection at bottom, box terminal electronic fuse monitoring, 690V AC, 250V DC	125A	00	1	236.0		33 506	15
circuit diagram for fuse monitoring on page 9/36							

QUADRON® CrossLinkSwitch NH, bus-mounting switch disconnector with fuses, 3-pole, **for door coupling drive** (spring-controlled)

connection at bottom, box terminal	125A	00	1	208.0		33 503	15
connection at top, box terminal	125A	00	1	208.0		33 504	15
additional extension shaft and door coupling twist handle required							

QUADRON® CrossLinkSwitch, bus-mounting switch disconnector, 3-pole, **with multifunctional handle** (spring-controlled)

connection at bottom, box terminal	160A	–	1	216.0		33 540	14
connection at top, box terminal	160A	–	1	216.0		33 541	14

QUADRON® CrossLinkSwitch, bus-mounting switch disconnector, 3-pole, **for door coupling drive** (spring-controlled)

connection at bottom, box terminal	160A	–	1	208.0		33 543	14
connection at top, box terminal	160A	–	1	208.0		33 544	14
additional extension shaft and door coupling twist handle required							

QUADRON® CrossLinkAdapter, busbar adapter, 3-pole, phase division 33mm

Type	Adapter length	Adapter width	Pack size	Weight kg/100 units		Part no.	
for system components with module width 106mm; to be used as spare slot mounting, busbar cover	200	106	2	36.5		32 594	09

Fuses are not included in delivery.
Devices can be fastened directly on busbars 12, 15, 20, 25, 30 x 5, 10mm, double-T and triple-T section.

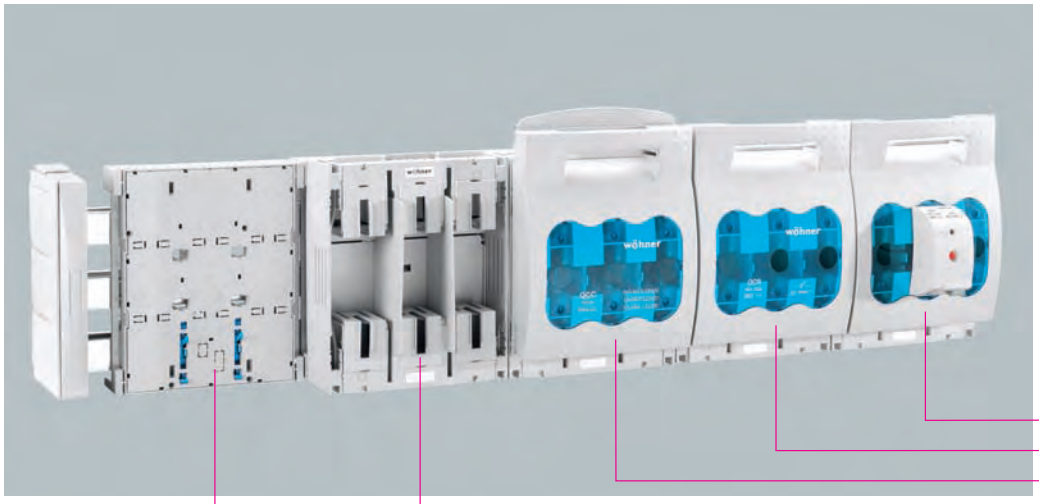

UL-certified products are highlighted in grey

CrossLink® TECHNOLOGY

CrossLink® Technology, module width 184

QUADRON® CrossLinkCarrier, NH bus-mounting fuse base, bottom/top connection, 3-pole

Type	Rated current	Size	Pack size	Weight kg/100 units		Part no.	
box terminal	250A	1	1	210.5		03 300	10
connection screw M10	250A	1	1	198.5		03 301	10
with shock protection, without grip lug covers; see page 2/30, 4/3 for additional NH bus-mounting fuse bases							

QUADRON® CrossLinkCarrier, bus-mounting fuse base Class J, bottom/top connection, 3-pole

wedge clamp terminal AWG 2-MCM 300*	200A	Class J 41 x 146	1	278.0		33 403	16

QUADRON® CrossLinkBreaker, NH bus-mounting fuse switch disconnector, bottom/top connection, 3-pole

box terminal	250A	1	1	266.0		33 600	09
connection screw M10	250A	1	1	246.0		33 601	09
connection screw M10, electronic fuse monitoring	250A	1	1	304.0		33 325	09
connection screw M10, electromechanical fuse monitoring	250A	1	1	330.0		33 160	09

QUADRON® CrossLinkAdapter, busbar adapter, 3-pole, phase division 57mm

Type	Adapter length	Adapter width	Pack size	Weight kg/100 units		Part no	
for system components with module width 184 mm; to be used as spare slot mounting, busbar cover	210	184	2	75.5		32 595	09

Fuses are not included in delivery.

Devices can be fastened directly on busbars 12, 15, 20, 25, 30 x 5, 10mm, double-T and triple-T section.

CrossLink® TECHNOLOGY

QUADRON®CrossLinkSwitch, module width 184

QUADRON®CrossLinkSwitch NH, bus-mounting switch disconnector with fuses, 3-pole, **with multifunctional handle** (spring-controlled)

Type	Rated current	Size	Pack size	Weight kg/100 units		Part no.	
connection at bottom, connection screw M10	250A	1	1	567.0		**33 510**	15
connection at top, connection screw M10	250A	1	1	589.0		**33 511**	15
connection at bottom, connection screw M10, electronic fuse monitoring	250A	1	1	575.0		**33 516**	15
circuit diagram for fuse monitoring on page 9/36							

QUADRON®CrossLinkSwitch NH, bus-mounting switch disconnector with fuses, 3-pole, **for door coupling drive** (spring-controlled)

connection at bottom, connection screw M10	250A	1	1	555.0		**33 513**	15
connection at top, connection screw M10	250A	1	1	577.0		**33 514**	15
additional extension shaft and door coupling twist handle required							

QUADRON®CrossLinkSwitch, bus-mounting switch disconnector, 3-pole, **with multifunctional handle** (spring-controlled)

connection at bottom, connection screw M10	320A	–	1	565.0		**33 550**	14
connection at top, connection screw M10	320A	–	1	587.0		**33 551**	14

QUADRON®CrossLinkSwitch, bus-mounting switch disconnector, 3-pole, **for door coupling drive** (spring-controlled)

connection at bottom, connection screw M10	320A	–	1	543.0		**33 553**	14
connection at top, connection screw M10	320A	–	1	565.0		**33 554**	14
additional extension shaft and door coupling twist handle required							

QUADRON®CrossLinkAdapter, busbar adapter, 3-pole, phase division 57mm

Type	Adapter length	Adapter width	Pack size	Weight kg/100 units		Part no.	
for system components with module width 184 mm; to be used as spare slot mounting, busbar cover	210	184	2	75.5		**32 595**	09

Fuses are not included in delivery.
Devices can be fastened directly on busbars 12, 15, 20, 25, 30 x 5, 10mm, double-T and triple-T section.

Accessories	**7** 11,12 **2** 26	→
Technical data	**8** 28–30	→
Dimensions	**9** 21	→

CrossLink® TECHNOLOGY

33 156		33 914		33 908		33 911	

Accessories, module width 106

for CrossLink® Technology

for QUADRON® CrossLinkCarrier NH, bus-mounting fuse base, 3-pole

Type	Size	Pack size	Weight kg/100 units		Part no.	
auxiliary conductor connection with box terminal	00	3	0.6		**33 915**	09
grip lug cover, 1 unit required for each fuse	00	30	1.2		**79 448**	10
cover for cable lugs, can be clipped on top and bottom	00	1	2.8		**79 811**	09
wedge clamp terminal for screw terminal M8, Cu and Al* conductors 16–70mm² s(r), s(s), f+AE	00 (03 299)	3	3.0		**33 224**	09
tunnel terminal for screw terminal M8, Cu 3 x 1.5–16mm² s(r), Cu 3 x 1.5–10mm² f+AE		3	6.4		**01 182**	09
* not maintenance-free when aluminium conductors are used (see page 8/2)						

for QUADRON® CrossLinkBreaker NH, bus-mounting fuse switch disconnector, 3-pole,

auxiliary conductor connection with box terminal	00	3	6		**33 915**	09
pilot switch for monitoring the disconnector lid position	000, 00, 2, 3	1	1.1		**33 156**	09
lid interlock for sealing wire	00	10	0.2		**03 849**	09
cover for cable lugs, can be clipped on top and bottom	00	1	2.8		**79 811**	09
wedge clamp terminal for screw terminal M8, Cu and Al* conductors 16–70mm² s(r), s(s), f+AE	00 (33 398, 33 394)	3	3.0		**33 224**	09
tunnel terminal for screw terminal M8, Cu 3 x 1.5–16mm² s(r), Cu 3 x 1.5–10mm² f+AE		3	6.4		**01 182**	09
* not maintenance-free when aluminium conductors are used (see page 8/2)						
more accessories see page 2/24						

for QUADRON® CrossLinkSwitch, NH-bus-mounting switch disconnector with fuses and bus-mounting switch disconnector, 3-pole

Type	Can be used with	Pack size	Weight kg/100 units		Part no.	
auxiliary conductor connection with box terminal	QCS-NH 00, QCS 160	3	0.6		**33 915**	09
connection terminal 120mm²		3	8.8		**33 914**	14
pilot switch for monitoring the switch position		1	1.1		**33 908**	14
door coupling twist handle, black, IP 66, lockable in neutral position, with up to 3 U-locks, door locking can be activated, without extension shaft	33 503	1	57.0		**33 910**	14
door coupling twist handle red-yellow IP 66, lockable in neutral position, with up to 3 U-locks, door locking can be activated, without extension shaft	33 504 33 543 33 544	1	57.0		**33 911**	14
extension shaft 290mm long		1	13.0		**33 912**	14
extension shaft 490mm long		1	22.0		**33 913**	14
switch can also be installed at a 90° angle to the left/right, with the handle in the same position						

CrossLink® TECHNOLOGY

33 142		33 145		33 909		33 910	

Accessories, module width 184

for CrossLink® Technology

for QUADRON® CrossLinkCarrier NH, bus-mounting fuse base, 3-pole

Type	Size	Pack size	Weight kg/100 units		Part no.	
cover for cable lugs, can be clipped on top and bottom	1	2	10.7		33 142	09
grip lug covers, 3 units required for covering NH base	1	3	2.5		33 916	10

for QUADRON® CrossLinkBreaker NH, bus-mounting fuse switch disconnector, 3-pole

cover for cable lugs, can be clipped on top and bottom	1	2	10.7		33 142	09
pilot switch for monitoring the disconnector lid position	1	1	1.3		33 917	09
disconnector lid locking for 3 locks with a shackle diameter of 4–7mm / sealing wire	1–3	10	0.5		33 157	09
barrier for handle to close off handle area from rear	1–3	10	2.2		33 155	09
arc chamber, retrofit package for higher utilisation category**	1	3	10.7		33 918	09

for QUADRON® CrossLinkSwitch, NH-bus-mounting switch disconnector with fuses and bus-mounting switch disconnector, 3-pole

Type	Can be used with	Pack size	Weight kg/100 units		Part no.	
cover for cable lugs, can be clipped on top and bottom	QCS-NH 1 QCS 320	2	10.7		33 142	09
pilot switch for monitoring the switch position		1	1.1		33 908	14
door coupling twist handle, black, IP 66, lockable in neutral position, with up to 3 U-locks, door locking can be activated, without extension shaft	33 513 33 514 33 553 33 554	1	57.0		33 910	14
door coupling twist handle red-yellow IP 66, lockable in neutral position, with up to 3 U-locks, door locking can be activated, without extension shaft		1	57.0		33 911	14
extension shaft 290mm long		1	13.0		33 912	14
extension shaft 490mm long		1	22.0		33 913	14
switch can also be installed at a 90° angle to the left/right, with the handle in the same position						

Connection accessories

box terminal for Cu conductors 70–185mm² f, 35–150mm² f, Cu 35–120mm² f+AE, la. Cu 15.5–24mm wide	QCC-NH 1, QCB-NH 1, QCS-NH 1, QCS 320	3	10.0		33 909	09
clamp connector for Cu conductors 70–150mm² rm, f+AE, la. Cu		1	6.3		33 163	09
wedge clamp terminal, single, for Cu- and Al*-conductors 35–150mm² s(r), s(s), f+AE		1	11.6		33 166	09
wedge clamp terminal, double, for Cu conductors 2 x 35–70mm² s(r), s(s), f+AE		1	16.6		33 145	09
terminal power rating, see page 8/30						
* not maintenance-free if aluminium conductors are used (see page 8/2)						

** Delivery date on request

33 603
33 602
33 601

QUADRON®CrossLinkBreaker NH size 000 to 3, NH bus-mounting fuse switch disconnector, bottom/top connection, 3-pole

Type	Rated current	Size	Pack size	Weight kg/100 units		Part no.	
box terminal	125A	000	1	113.0		**33 216**	09
box terminal	160A	00	1	100.0		**33 198**	09
connection screw M8	160A	00	1	100.0		**33 398**	09
box terminal	250A	1	1	266.0		**33 600**	09
connection screw M10	250A	1	1	246.0		**33 601**	09
connection screw M10	400A	2	1	522.0		**33 602**	09
connection screw M12	630A	3	1	756.0		**33 603**	09

QUADRON®CrossLinkBreaker NH size 00 to 3, NH bus-mounting fuse switch disconnector, bottom/top connection, 3-pole, **with electronic fuse monitoring**

box terminal	160A	00	1	117.0		**33 324**	09
connection screw M8*	160A	00	1	117.0		**33 394**	09
connection screw M10	250A	1	1	304.0		**33 325**	09
connection screw M10	400A	2	1	572.0		**33 326**	09
connection screw M12	630A	3	1	796.0		**33 327**	09

QUADRON®CrossLinkBreaker NH size 00 to 3, NH bus-mounting fuse switch disconnector, bottom/top connection, 3-pole, **with electromechanical fuse monitoring**

box terminal	160A	00	1	180.0		**33 206**	09
connection screw M8	160A	00	1	180.0		**33 420**	09
connection screw M10	250A	1	1	330.0		**33 160**	09
connection screw M10	400A	2	1	574.0		**33 161**	09
connection screw M12	630A	3	1	824.0		**33 162**	09
circuit diagram for fuse monitoring on page 9/36							

Conversion kit

for 5mm busbars	2	1	6.5		**33 148**	09
for mounting on 12, 15, 20, 25 and 30 x 5mm busbars for QUADRON®CrossLinkBreaker sizes 2						

Devices can be fastened directly on busbars 12, 15, 20, 25, 30 x 5, 10mm, double-T and triple-T section.
Conversion kit 33 148 is required for mounting sizes 2 onto 5mm busbars, size 3 is not suitable for 5mm busbars.
* Delivery date on request

33 156		33 155		33 918		01 182		33 145	

Accessories

for QUADRON®CrossLinkBreaker

Pilot switch, for monitoring disconnector lid position

Type	Size	Pack size	Weight		Part no.	
			kg/100 units			
1 changeover switch 250V AC / 5A; 30V DC / 4A	000, 00, 2, 3	1	1.1		33 156	09
1 changeover switch 250V AC / 5A; 30V DC / 4A	1	1	1.3		33 917	09

Disconnector lid interlock, to seal the disconnector

for sealing wire	000	10	0.1		33 051	09
	00	10	0.2		03 849	09
for 3 padlocks with hasp diameter 4 – 7mm	1 – 3	10	0.5		33 157	09

Barrier for handle

to close off handle area from rear	1 – 3	10	2.2		33 155	09

Arc chamber

retrofit package for higher utilisation category**	1	3	10.7		33 918	09

Connection accessories

Type	Connection	Size	Pack size	Weight		Part no.	
	mm²			kg/100 units			
box terminal for Cu conductor	70 – 185mm² f, 35 – 150mm² s(r), Cu 35 – 120mm² f + AE, la. Cu 15.5 – 24mm width	1	3	10.0		33 909	09
clamp connector for Cu conductors, s(r), f + AE, fl. Cu	70 – 150 / 18 x 2 – 14	1	1	6.3		33 163	09
	120 – 240 / 21 x 1 – 14	2	1	10.6		33 164	09
	150 – 300 / 25 x 1 – 13	3	1	12.5		33 165	09
wedge clamp terminal, single, for Cu and Al* conductors, s(r), s(s), f, f + AE	16 – 70	00 (33 398, 33 394, 33 206)	3	3.0		33 224	09
	35 – 150	1	1	11.6		33 166	09
	50 – 240	2	1	19.9		33 167	09
	150 – 300	3	1	24.7		33 168	09
wedge clamp terminal, double, for Cu conductors, rm, sm, f + AE	2 x 35 – 70	1	1	16.6		33 145	09
	2 x 70 – 120	2	1	27.8		33 146	09
	2 x 150	3	1	36.8		33 147	09
	2 x 185	3	1	36.8		33 385	09
tunnel terminal	3 x 1.5 – 16	00 (33 398, 33 394, 33 206)	3	6.4		01 182	09

* Not maintenance-free if aluminium conductors are used (see page 8/2)

** Delivery date on request

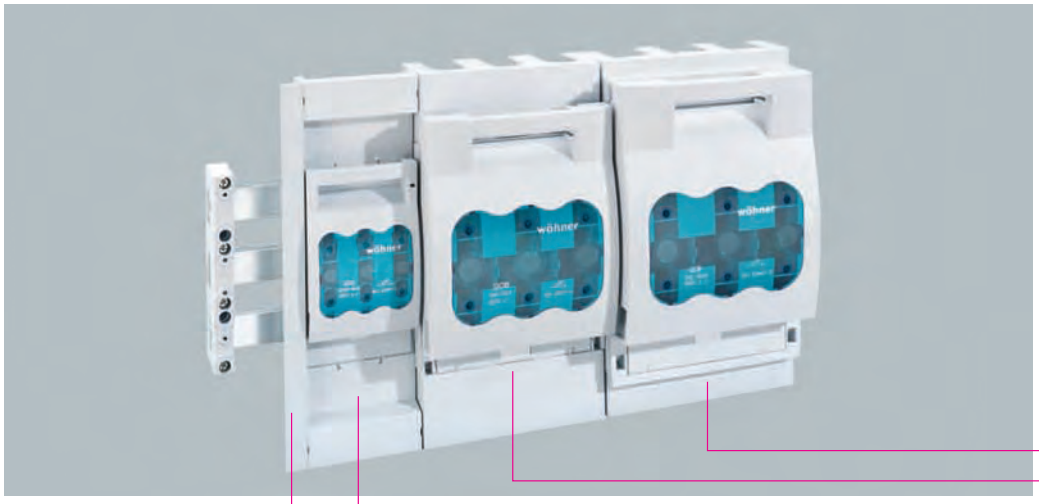

Accessories

for QUADRON®CrossLinkBreaker

Equalising trim for adjusting the installation depth

Type	Dimensions	Size	Pack size	Weight		Part no.	
	W x H			kg/100 units			
equalising trim 2 sections	106 x 350	00	1	12.4		33 315	09
trim strip	20 x 350	00	2	6.0		33 317	09
cover for cable lug top and bottom (2 units are required)	184 x 350	1	2	10.7		33 142	09
equalising trim 2 sections	210 x 350	2	1	21.1		33 316	09
for mask cutout up to 340 high, 83 in front of the front edge of the busbar							

Cover

for cable lug, can be clipped on at top or bottom	00	1	2.8		79 811	09
	1	2	10.7		33 142	09
	2	2	10.9		33 143	09
	3	2	15.6		33 144	09
for connection area, can be clipped on at top or bottom	2	2	4.3		33 418	09
	3 max. 600A	2	5.6		33 419	09

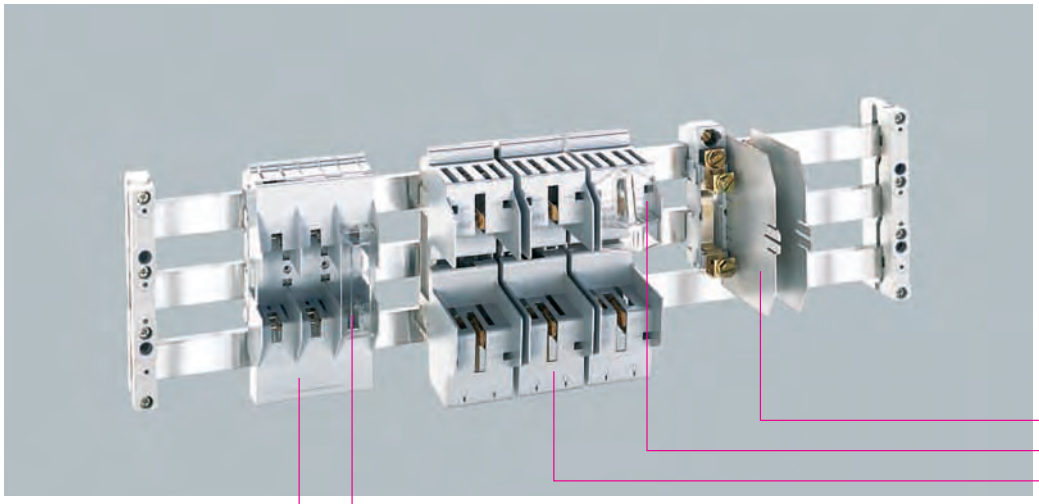

QUADRON®CrossLinkCarrier NH, bus-mounting fuse base, 3-pole, **bottom/top connection**

Type	Rated current	Size	Pack size	Weight kg/100 units		Part no.	
box terminal	160A	00	1	87.0		03 199	10
connection screw M8	160A	00	1	87.0		03 299	10
box terminal	250A	1	1	210.5		03 300	10
connection screw M10	250A	1	1	198.5		03 301	10
with shock protection, without grip lug covers; for accessories, see page 2/25, 2/26							
QUADRON®CrossLinkCarrier NH can be fastened directly on busbars 12, 15, 20, 25, 30 x 5, 10mm, double-T and triple-T section.							

NH bus-mounting fuse base size 00, 3-pole, top connection

clamp	160A	00	4	66.5		03 654	10
screw M8	160A	00	4	64.5		03 656	10
with shock protection, without grip lug covers							

NH bus-mounting fuse base size, 3-pole, bottom connection

screw M10	400A	2	1	291.2		03 693	10
with shock protection, without grip lug covers							

Grip lug cover, suitable for NH bases with shock protection

Type	Size	Pack size	Weight kg/100 units		Part no.	
3 units required for covering NH base	00	30	1.2		79 448	10
3 units required for covering NH base	1	3	2.5		33 916	10
3 units required for covering NH base	2	30	1.5		79 449	10

Bus-mounting fuse base, 3-pole, connecting terminals at top

Type	Rated current	Internal gauge	Connection mm² max.	Pack size	Weight kg/100 units		Part no.	
screw M8	160A	80	70	4	72.2		03 520	10
with 2 barriers for semiconductors (super-fast) fuse links with bolt-on lugs as per DIN 43 653, gauge 80mm								

Bus-mounting fuse base, 3-pole, connecting terminals at bottom

screw M10	400A	110	240	1	239.7		03 518	10
with 2 barriers for semiconductors (super-fast) fuse links with bolt-on lugs as per DIN 43 653, gauge 110mm								

NH bus-mounting fuse bases suitable for direct mounting on busbars 12 – 30 x 5 – 10mm, double-T and triple-T section.
For further NH bus-mounting fuse bases see p. 4/3.

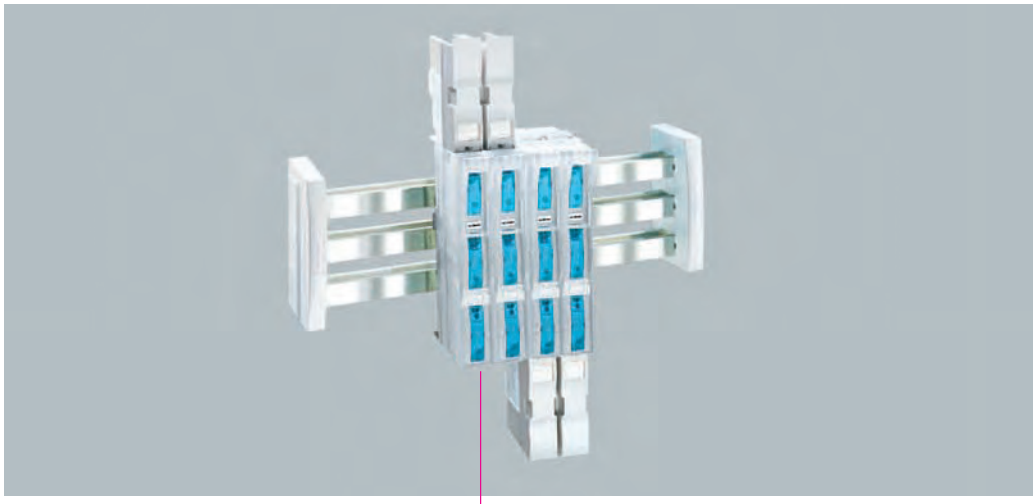

33 234

SECUR®LeanStreamer size 00, NH in-line fuse switch disconnector, 3-pole switching, bottom/top connection

Type	Rated current	Size mm²	Pack size	Weight kg/100 units		Part no.	
clamp 70mm²/screw M8	160A	00	1	146.0		**33 234**	12
with terminal compartment cover							

SECUR®LeanStreamer size 00, NH in-line fuse switch disconnector, 3-pole switching, bottom/top connection, **with electronic fuse monitoring, 400V AC**

clamp 70mm²/screw M8	160A	00	1	146.0		**33 285**	12
with terminal compartment cover							
circuit diagram for fuse monitoring on page 9/22							

Pilot switch, for monitoring lid position

Type	Size	Pack size	Weight kg/100 units		Part no.	
1 changeover switch 250V AC / 5A; 30V DC / 4A	00	1	1.1		**33 156**	09
flat push-on connector 2.8 x 0.5 (DIN 46 244-A)						

Connection accessories

clamp connector 1.5 – 70mm² for Cu conductors, s(r), f + AE; fl. Cu	00	3	1.5		**03 727**	09
M8 screw connector	00	3	1.4		**30 894**	09
wedge clamp terminal 6–70mm², for Cu and Al* conductors, s(r), s(s), f + AE	00	3	3.0		**33 224**	09
* not maintenance-free when aluminium conductors are used (see page 8/2)						

Devices can be fastened directly on busbars 12, 15, 20, 25, 30 x 5, 10mm, double-T and triple-T section.

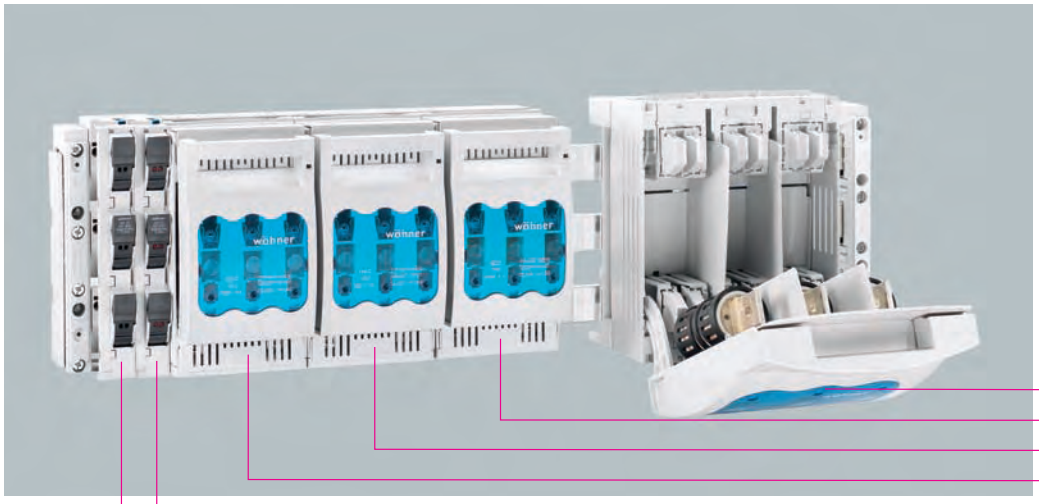

UL-certified products are highlighted in grey

CrossLink® TECHNOLOGY

33 403
33 402
33 422
33 421
31 959
31 958

Mount for fuses in accordance with UL248

AMBUS® EasyLiner, bus-mounting fuse base, 3-pole, 3-pole disconnecting, with spring terminals

Type	Width	Rated current / Rated voltage	Pack size	Weight kg/100 units		Part no.	
for Class CC	27	30A / 600V	4	18.6		31 958	01
for Class CC, with LED	27	30A / 600V	4	18.8		31 959	01

QUADRON® CrossLinkCarrier Class J, bus-mounting fuse base, bottom/top connection, 3-pole

for Class J, 21 x 57*	106	30A / 600V	1	138.0		33 421	16
for Class J, 27 x 60*	106	60A / 600V	1	135.0		33 422	16
for Class J, 29 x 117	106	100A / 600V	1	129.0		33 402	16
for Class J, 41 x 146*	184	200A / 600V	1	278.0		33 403	16

QUADRON® J-Carrier, Class J bus-mounting fuse base, bottom/top connection, 3-pole

Class J, 54 x 181	256	400A / 600V	1	690.0		33 311	16
for busbars 12, 20, 30 x 10, double-T and triple-T section.							

* Delivery date on request

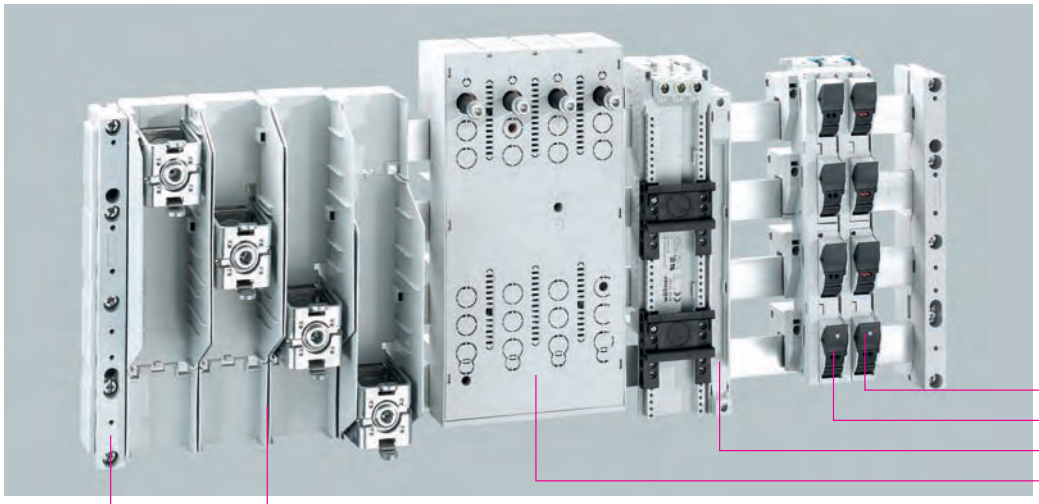

** UL-certified products are highlighted in grey

31 964
31 963
32 146 **
32 582
01 162
01 485

System components 4-pole

Busbar support

Type	Pack size	Weight kg/100 units		Part no.	
4-pole, for flat busbars 12 x 5 – 30 x 10, IEC	10	26.6		01 485	06
1-pole, for double-T section busbar, for connecting to 01 231	4	13.0		01 116	06
1-pole, for triple-T section busbar, for connecting to 01 232	4	15.0		01 132	06

Connection set, 4-pole, for 20 x 5 – 30 x 10, double-T and triple-T profile, without cover cap

560A, for Cu u. Al* 120 – 300mm², s(r), s(s), f	1	210.0		01 147	07
800A, for fl. Cu and flat busbars up to 32 x 10	1	180.0		01 162	07
* not maintenance-free when aluminium conductors are used (see page 8/2)					

System cover, 4-pole

holder set (left + right) for cover sections, 4-pole	1	21.0		01 137	07
front cover section (4-pole), 1100mm long, can only be used with holder no. 01 137	1	58.0		01 599	07
top/bottom cover section, 1100mm long, can only be used with holder no. 01 136 or 01 137	2	27.1		01 555	07
can be used for systems with 12, 20, 25, 30 x 5, 10 busbars, double-T and triple-T section					

Cover cap, 4-pole, for 20 x 5 – 30 x 10, double-T and triple-T profile

W x H x D 228 x 260 x 90mm	1	45.0		01 597	07

PE/N module, with 2 connection terminals 16mm², without cable

Type	Adapter length	Adapter width	Pack size	Weight kg/100 units		Part no.	
80A, connectable to all EQUES®EasyConnectors	242	18	4	14.1		32 146	05

EQUES®PowerConnector, 4-pole busbar adapter

250A for ABB Tmax T4	270	140	1	180.0		32 584	05
250A for Schneider Electric NSX100–NSX250	270	140	1	180.0		32 582	05
250A for Moeller NZM2-XKR4	270	140	1	180.0		32 580	05
250A for Siemens 3VL2, 3VL3	270	140	1	180.0		32 578	05
500A for ABB Tmax T5	300	185	1	360.0		32 585	05
500A for Schneider Electric NSX400, NSX630	300	185	1	350.0		32 583	05
500A for Moeller NZM3-XKR13O	300	185	1	350.0		32 581	05
500A for Siemens 3VL400	300	185	1	350.0		32 579	05
Upper connection between switch and busbar system							

AMBUS®EasyLiner, bus-mounting fuse base, 3-pole + N, 4-pole isolating, with spring terminals

Type	Rated current/ Rated voltage	Pack size	Weight kg/100 units		Part no.	
for 10 x 38mm cylindrical fuses IEC 60 629-2	32A / 690V	4	25.2		31 963	01
for 10 x 38mm cylindrical fuses IEC 60 629-2 with LED	32A / 690V	4	25.2		31 964	01

Designation for UL 508A		Accessories	2 1,2 7 13 →
Approvals	8 47–52	Technical data	8 5,9,13,15 →
		Dimensions	9 5,6,8,14 →

Centre feed unit

4000A

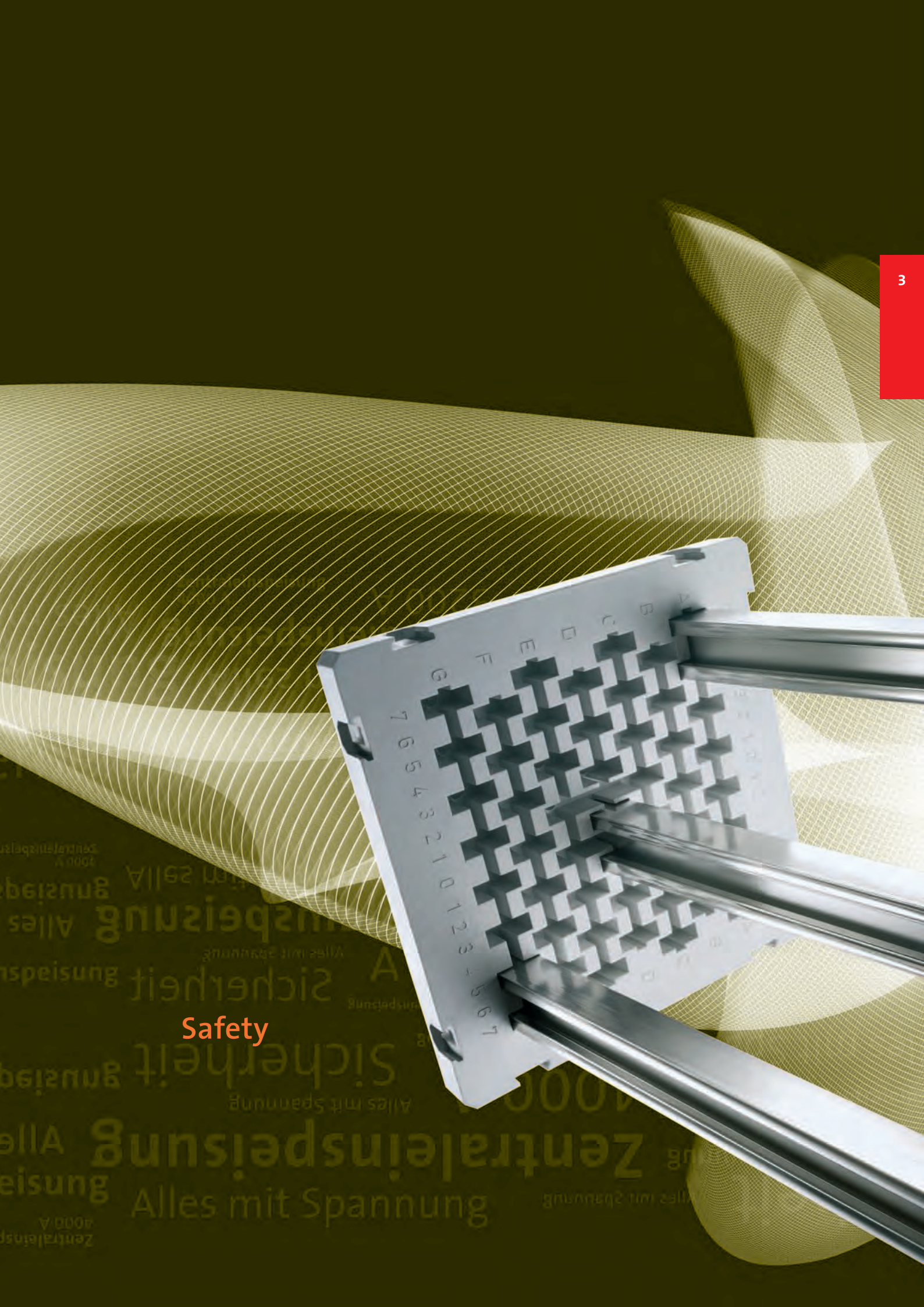
Safety
Zentraleinspeisung
Alles mit Spannung

Centre feed unit

New TCC section busbar: Connection options with CRITO®PowerClip and CRITO®ProfiClip, and terminal studs (screw in c-slot).

1-pole, side busbar support for variable, multi-pole structures; also suitable for double-T and triple-T sections

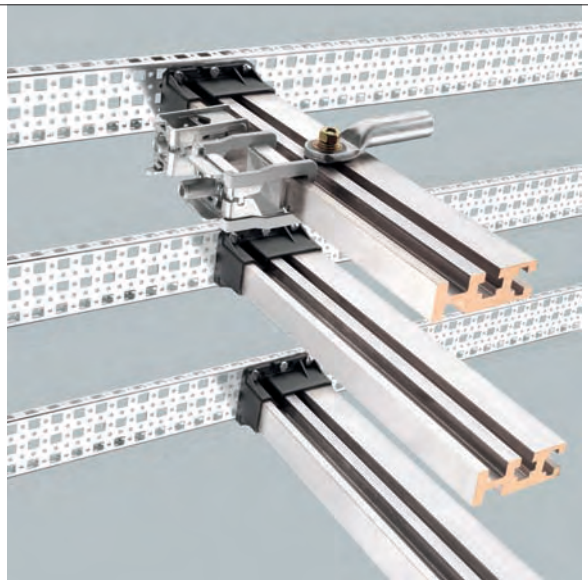

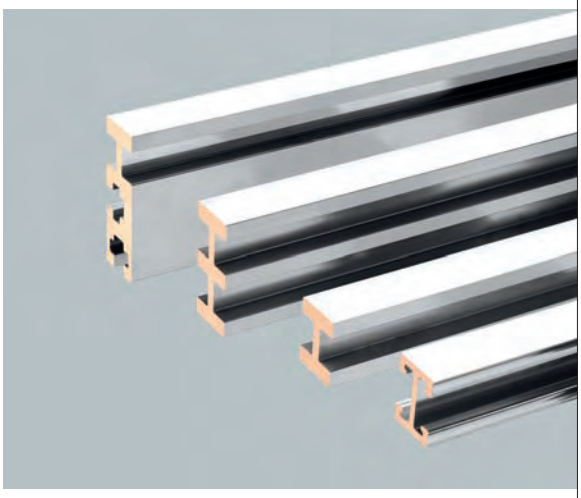

Busbars for centre-feed unit

Double-T and triple-T sections with two different cross-sections

Triple-T sections

TCC section busbar for strong currents and triple-sided connection options

Prefabricated lengths for various enclosure widths

System benefits

The fuse-free construction of this feed unit requires a high short-circuit rating. The centre feed unit 4000A is designed specifically for this purpose.

Centre feed unit 4000A

Triple-T profile and corresponding profile terminals allow a secure transmission of currents up to 4000A in centre feeds. The clear design, the drill-free assembly and the electrical direct-contacting with the aid of embracing CRITO® ProfileClips reduce the assembly time to a minimum.

The ability to accommodate multiple incoming connections of up to 300mm² in Cu or Al, and the wide range of outgoing connections up to 2 x 100 x 10mm², together with a choice of 3 or 4-pole construction, make it possible to create customised solutions.

The new TCC section busbars offer even more connection options: one side with a 30 x 10 T section for connection with universal and brace terminals. Ensure secure and fast connection – and can be retrofitted easily. Two other sides of this busbar are fitted with C-slots for securing screws. Busbars, for example, can be easily connected here; connections can be made on up to three sides simultaneously.

Standardised production and type-testing ensure that units always meet relevant safety standards. Current carrying capacity, which is fully confirmed by type-testing, and a short-circuit withstand capacity of up to 120kA, guarantee that these units are suitable for use in even the most demanding applications.

Centre feed unit up to 4000 A combines the benefits of high short-circuit withstand capacity, assembly without drilling, clamp-type terminals and simple construction (pages 3/1 and 3/2)

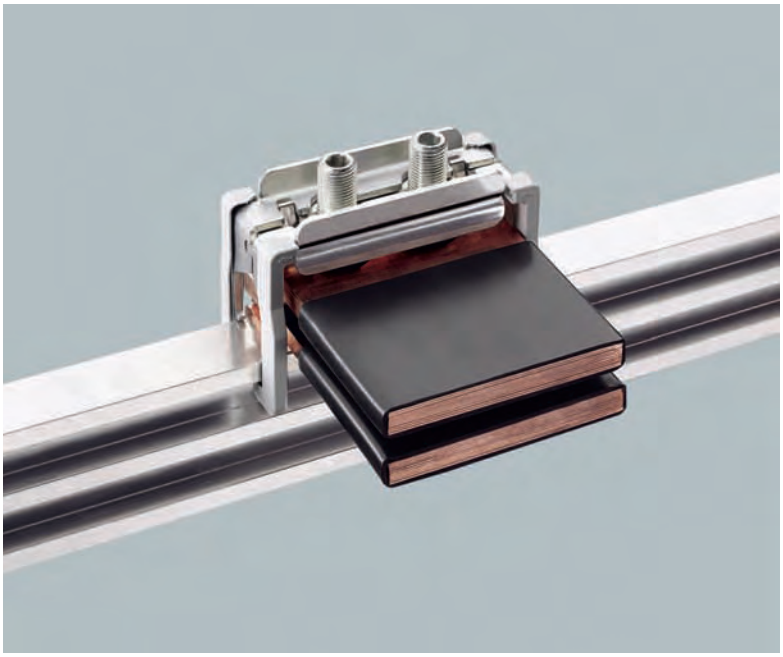

CRITO®PowerClip

Brace terminals for 50, 63 and 100mm flexible copper busbars

For 30 x 10mm busbars and section busbars

For feeder circuits up to 600V applicable according to UL 508A

** UL-certified products are highlighted in grey

35 005 **
01 318
01 911
35 005

Centre feed unit up to 4000A

Centre feed unit

Cabinet width	Mounting dimensions	Busbar length	Rated current	Pack size	Weight kg/100 units		Part no.	
600	488 – 563	0.45m	1250A	1	1434.0		35 007	11
800	688 – 763	0.65m	1250A	1	1716.0		35 006	11
600	488 – 563	0.45m	2000A	1	1716.0		35 005	11
800	688 – 763	0.65m	2000A	1	2488.0		35 004	11
600	488 – 563	0.45m	3200A	1	2200.0		35 015	11
800	688 – 763	0.65m	3200A	1	2940.0		35 016	11
800	688 – 763	0.65m	4000A	1	3500.0		35 034	11
Basic system: 2 busbar supports, 6 fixing brackets with screws, 3 busbars cut to length; 8 supports for covers								

Universal conductor terminal

Connection	Terminal space W x H	For use up to max.	Pack size	Weight kg/100 units		Part no.	
16 – 120mm², s(r), f, f + AE and fl. Cu	17 x 15	440A	25	10.9		01 203	07
95 – 300mm², sol(r), sol(s), s(s), f, f + AE	41 x 25	630A	3	85.7		01 094	07

CRITO® ProfiClip, brace terminal

Cu and Al* 95 – 185mm², s(r), s(s), f	30 x 20	500A	6	31.2		01 318	07
Cu and Al* 120 – 300mm², s(r), s(s), f	32 x 25	600A	3	42.5		01 760	07
* not maintenance-free when aluminium conductors are used (see page 8/2)							

Profile terminal, connection at front and back of busbar section

Connection	Section	Terminal space W x H	For use up to max.	Pack size	Weight kg/100 units		Part no.	
320 – 800mm²	double-T	41 x 20 – 42	1600A	3	67.0		01 185	07
500 – 750mm²	double-T	51 x 5 – 28	1600A	3	70.5		01 906	07
600 – 900mm²	double-T	64 x 5 – 28	1600A	3	84.0		01 907	07
500 – 1000mm²	double-T	51 x 20 – 42	1600A / 2000A*	3	73.5		01 936	07
600 – 1200mm²	double-T	64 x 20 – 42	1600A / 2000A*	3	85.9		01 911	07
800 – 1600mm²	double-T	81 x 20 – 42	1600A / 2500A*	3	101.1		01 934	07
1000 – 2000mm²	double-T	101 x 20 – 42	1600A / 2800A*	3	113.7		01 935	07
320 – 800mm²	triple-T	41 x 23 – 45	1600A	3	105.0		01 513	07
500 – 1260mm²	triple-T	64 x 23 – 45	2000A / 2500A*	3	124.0		01 008	07
1200 – 3600mm²	triple-T	101 x 23 – 45	2500A / 3200A*	3	172.7		01 186	07
can also be used on circuit-breaker connection								
* for centre feeding								

** UL-certified products are highlighted in grey

01 188	**
35 008	

CRITO®PowerClip, brace terminal for busbars 30 x 10 and section busbars

Busbars	Terminal space	For use	Pack size	Weight		Part no.	
	W x H	up to max.		kg/100 units			
20 x 5 – 30 x 10 double-T and triple-profile	55 x 28	1600A/2000A*	3	50.0		01 069	07
	68 x 28	1600A/2000A*	3	63.0		01 070	07
	105 x 28	1600A/2800A*	3	84.0		01 071	07
for the connection of flat and flexible copper busbars							
* in case of centre feed							

Screw-type terminal, clip-on

for cable lug DIN 46 234	M 8 x 8	490A	20	16.5		01 514	07
	M 10 x 10	630A	6	36.2		01 047	07

Laminated copper busbar, insulated, length 2m

Connection	Rated current	Cross section	Pack size	Weight		Part no.	
	50K	mm²		kg/100 St.			
10 x 40 x 1	1181A	400	1	712.0		01 615	06
10 x 50 x 1	1395A	500	1	890.0		01 509	06
10 x 63 x 1	1600A	630	1	1121.4		01 510	06
10 x 80 x 1	1775A	800	1	1424.0		01 061	06
10 x 100 x 1	1985A	1000	1	1780.0		01 273	06
for additional cross sections see page 7/5 and 7/6							

Components, for individual mounting

Type	Length	Section	Cross section	Pack size	Weight		Part no.	
			mm²		kg/100 units			
busbar support, outer, universal, including fixing materials				2	458.0		35 008	11
busbar support for double-T section, central, 4-pole, including fixing materials				1	458.0		35 009	11
busbar support for double and triple-T section, central, 3pole, including fixing materials				1	458.0		35 001	11
additional support for cover, including screw				4	1.4		35 017	11
section busbar, E-Cu, tin-plated	0.45 m	Double-T	500	1	198.8		01 225	06
section busbar, E-Cu, tin-plated	0.65 m	Double-T	500	1	288.1		01 226	06
section busbar, E-Cu, tin-plated	0.45 m	Double-T	720	1	291.0		01 838	06
section busbar, E-Cu, tin-plated	0.65 m	Double-T	720	1	419.0		01 831	06
section busbar, E-Cu, tin-plated	0.45 m	Triple-T	1140	1	464.0		01 188	06
section busbar, E-Cu, tin-plated	0.65 m	Triple-T	1140	1	672.3		01 189	06

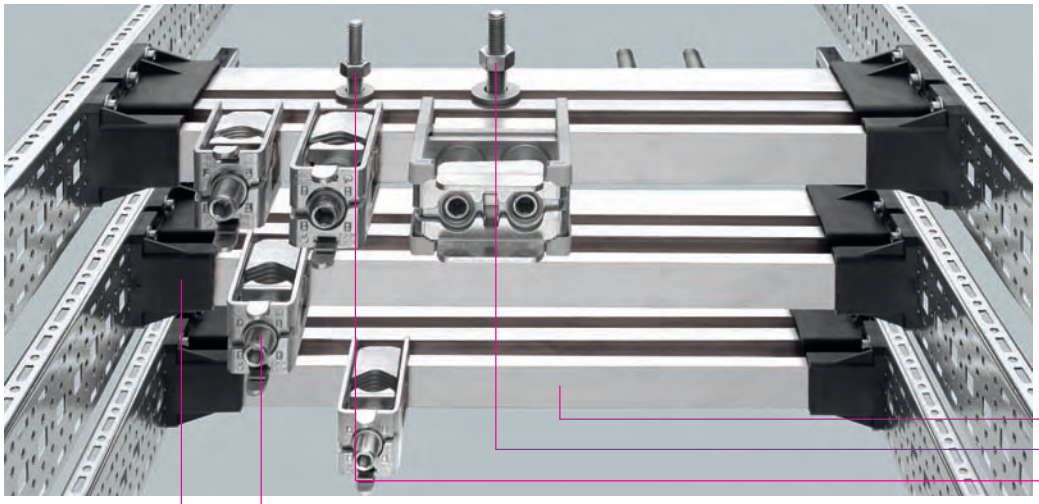

Centre feed unit up to 4000A

Busbar holder, 1-pole, lateral

Type	Pack size	Weight		Part no.	
		kg/100 units			
for 30 x 10, double-T, triple-T and TCC section busbars, 7.5mm insulation between busbar and mounting plate	6	11.2		01 369	11

Standard copper busbar

Type	Length	Cross section	Pack size	Weight		Part no.	
		mm²		kg/100 units			
TCC profile busbars, tin-plated	0.492m	1600	1	691.5		01 377	06
	0.692m	1600	1	972.6		01 378	06
	2.4m	1600	1	3373.2		01 610	06
for additional profile busbars see page 3/2							

Special connection screws, with nut and spring washer for TCC profile busbars

Type	For lengths	Thread	Pack size	Weight		Part no.	
				kg/100 units			
connection screw for TCC profiles, can be retrofitted	10–25	M 10 x 45	12	5.1		01 379	07
connection screw for TCC profiles, cannot be retrofitted	10–40	M 12 x 60	12	9.1		01 380	07

CRITO®ProfiClip, brace terminals

For busbars	Connection	For use	Pack size	Weight		Part no.	
		up to max.		kg/100 units			
20 x 5 – 30 x 10, double-T, triple-T and TCC section busbars	for flat busbars up to 30 x 20	750A	6	30.3		01 319	07
	Cu and Al* 95 – 185mm², s(r), s(s), f	500A	6	31.2		01 318	07
	for flat busbars up to 32 x 20	800A	3	34.7		01 759	07
	Cu and Al* 120 – 300mm², s(r), s(s), f	600A	3	42.5		01 760	07
* not maintenance-free when aluminium conductors are used (see page 8/2)							

CRITO®PowerClip, brace terminal for the connection of flat and flexible copper busbars

For busbars	Terminal space	For use	Pack size	Weight		Part no.	
	W x H	up to max.		kg/100 units			
30 x 10, double-T, triple-T and TCC section busbars	55 x 28	1600A/2000A*	3	50.0		01 069	07
	68 x 28	1600A/2000A*	3	63.0		01 070	07
	105 x 28	1600A/2800A*	3	84.0		01 071	07
* in case of centre feed							

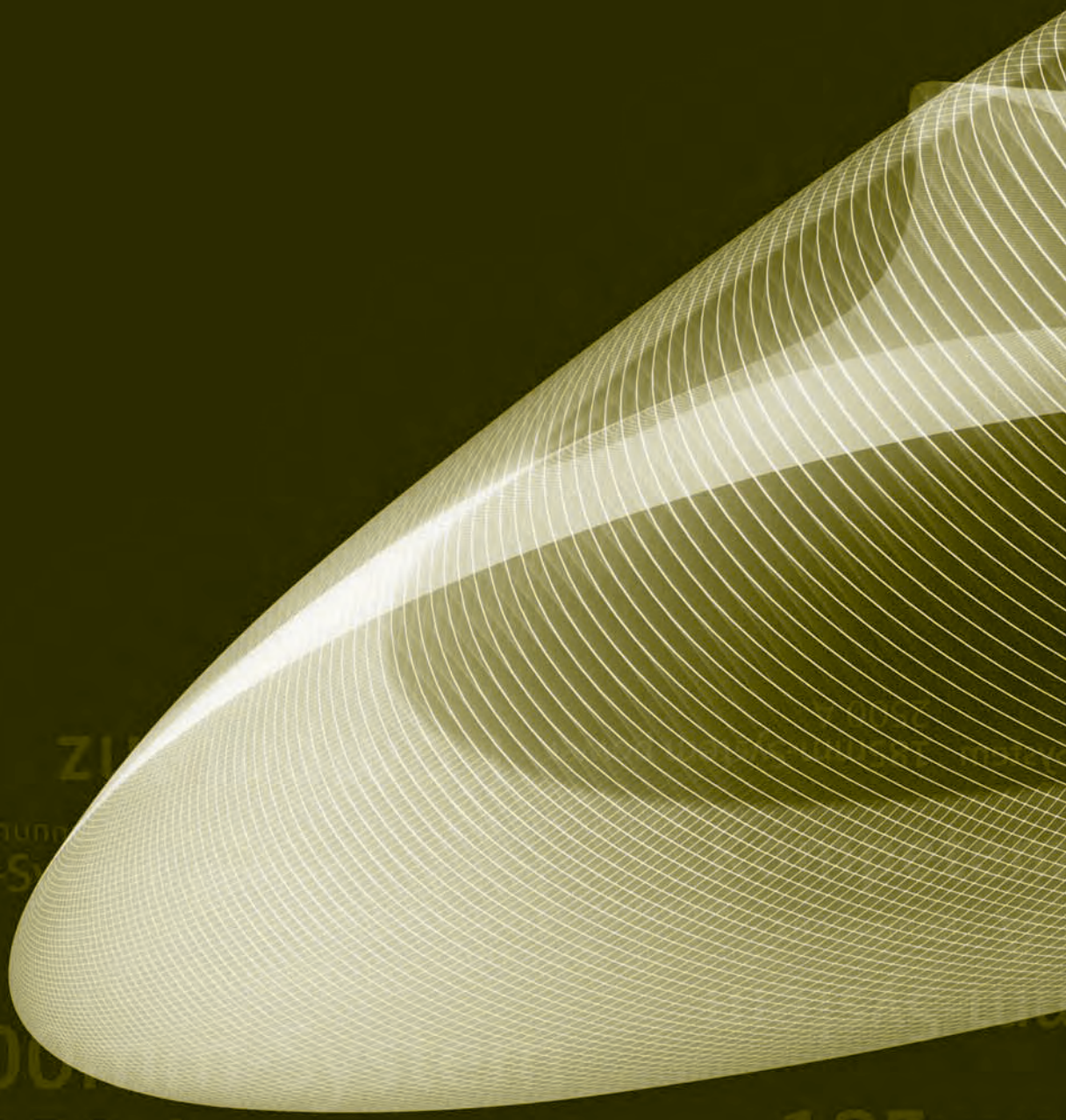

185mm-System power

2500A

100mm-System

1250A

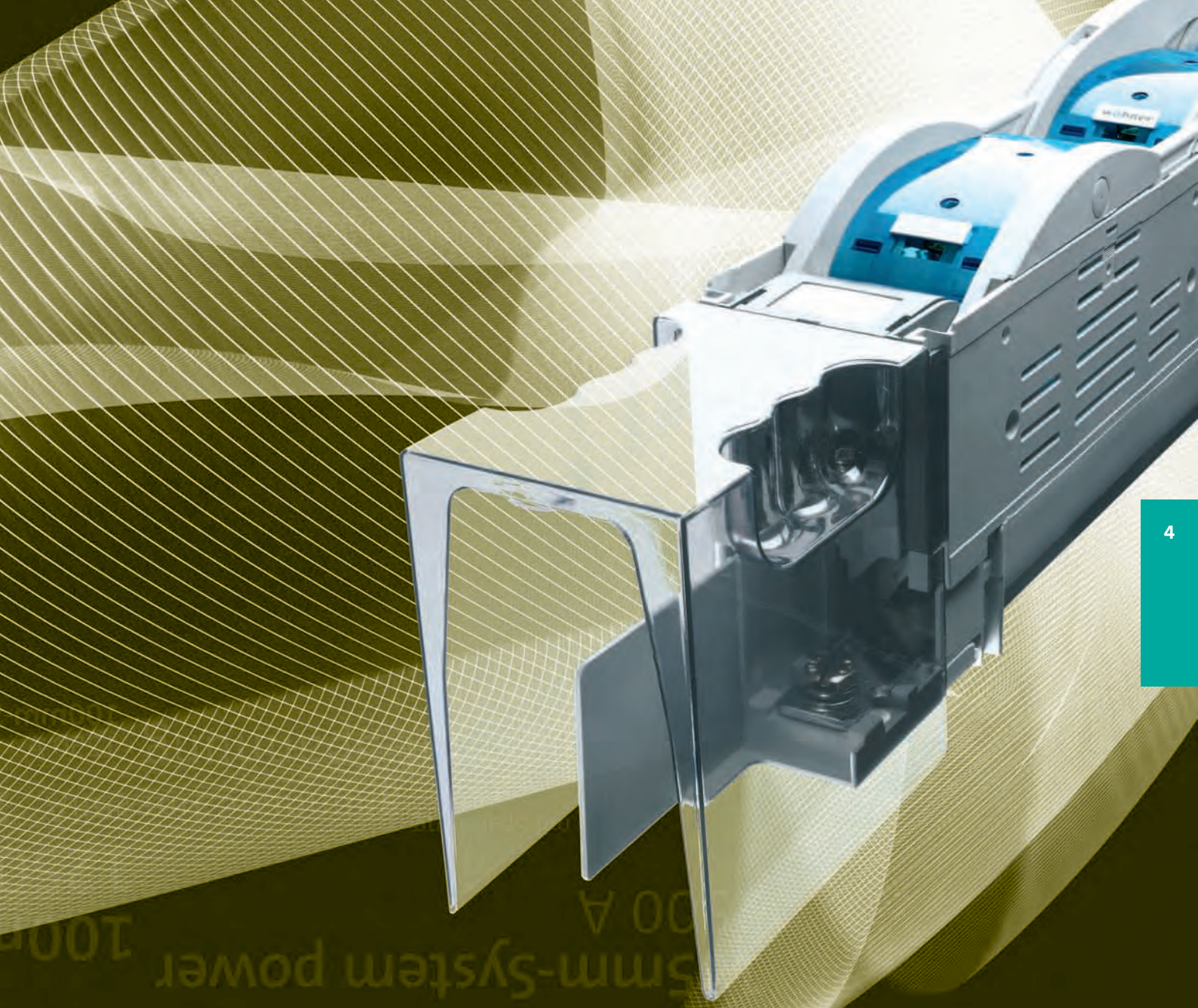

Expertise

System benefits

The 100mm-system and the 185mm-system power are designed for use in efficient power distribution assemblies with a high short-circuit withstand capacity. The small size of the NH in-line fuse switch disconnectors used in these systems allows the switch cubicle space to be used optimally. The wide spacing of the busbars in the 185mm-system power means that short-circuit ratings in excess of 100kA can be achieved. All components of the 100mm-system and the 185mm-system power can be mounted with little handling, and the time-consuming task of drilling busbars is no longer required.

Connection technology

Wöhner offers universal-conductor terminals, CRITO® ProfiClips and stud-type terminals for making connections to the busbars without drilling. Clip-on screw-type terminals are also available to permit the connection, without drilling, of conductors fitted with cable lugs. Busbar connectors up to 80 x 40mm are used to connect flat conductors and laminated busbars. Switchgear rated up to 200A can be accommodated in the 100mm-system using an adapter.

NH bus-mounting fuse bases

Single-pole NH fuse bases up to size 3, with protection against accidental contact with live parts, are available for both the 100mm-system and the 185mm-system power. Three-pole block-form NH fuse bases in size 00 are also available for direct connection to the 100/185mm system.

SECUR®LeanStreamer

The SECUR®LeanStreamer NH in-line fuse switch disconnector in sizes 00 to 3 can be mounted easily onto the 100mm-system and the 185mm-system power. The development of new technology allows the SECUR® LeanStreamer to be mounted without the need for drilling. Current transformers can be fully integrated into the main body of the NH in-line fuse switch disconnectors in sizes 1 to 3. The current transformer can also be integrated into SECUR®LeanStreamer sizes 1 to 3 at any time. The wiring of the transformer can be carried out on the terminal of an optional component support. The SECUR®LeanStreamer size 00 can be fitted in the 100mm module and in the 185mm-system power using double adapters. Current transformers with NH in-line fuse switch disconnectors size 00 in the 185mm-system power can also be used now. The transformer can be mounted in the single or double adapter at any time. SECUR®LeanStreamer offers a version with an electronic fuse monitoring feature for enhanced fuse monitoring. SECUR®LeanStreamer are available as open fuse units in addition to the single-pole and 3-pole switching NH in-line fuse switch disconnector versions. The wide choice of connection accessories allows round sector conductors to be connected.

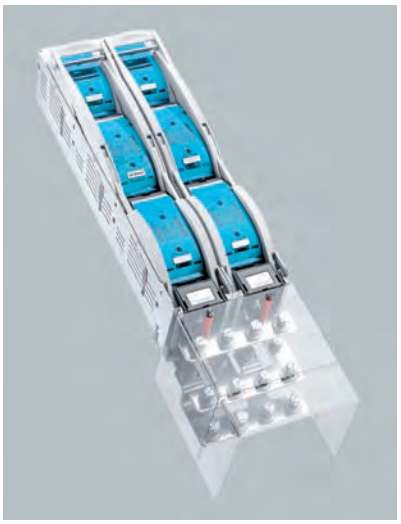

SECUR®LeanStreamer

Double NH fuse block

1250A, 2 x NH size 3

Choice of outgoing connection at top or bottom

Connection 4 x M12 screw for cable lug, with appropriately sized cover

Assembly of the busbar in the 185mm-System power with no drilling required

Current transformers can be retro-fitted for SECUR®LeanStreamer sizes 00 to 3

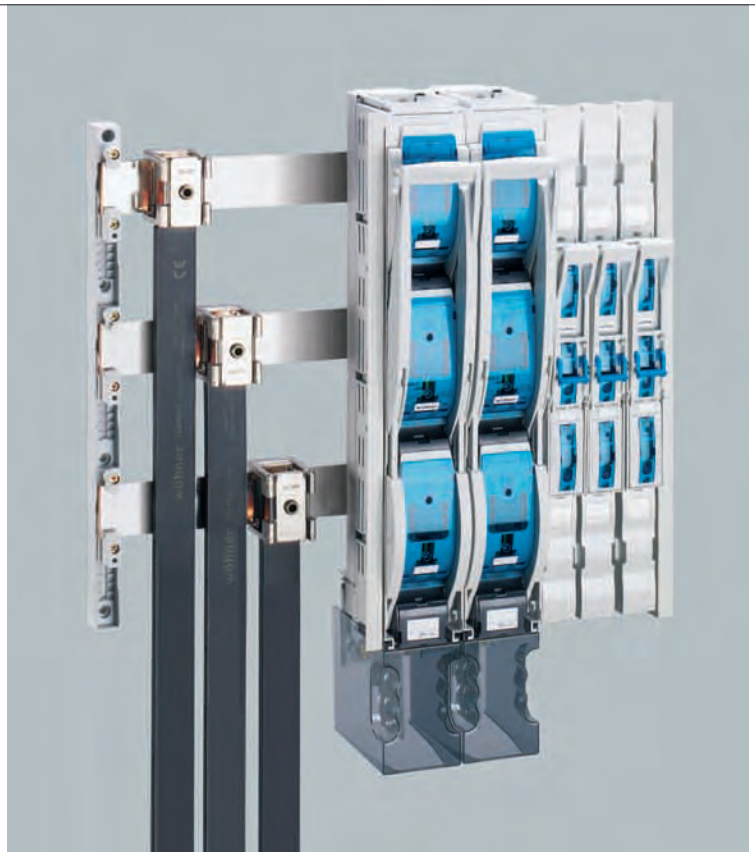

The universal busbar support allows 10mm thick DIN flat and section busbars to be assembled without drilling

The NH in-line fuse switch disconnectors size 00 to 3 are accommodated in the 185mm-system power without drilling

Current transformer mounting is generally prepared

No additional space requirements, simply swivel

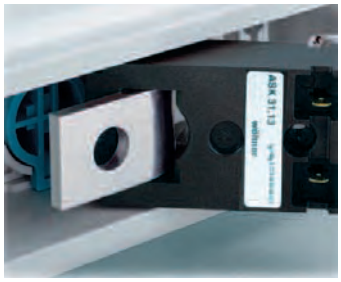

Transformer available in various measurement ranges and precision classes

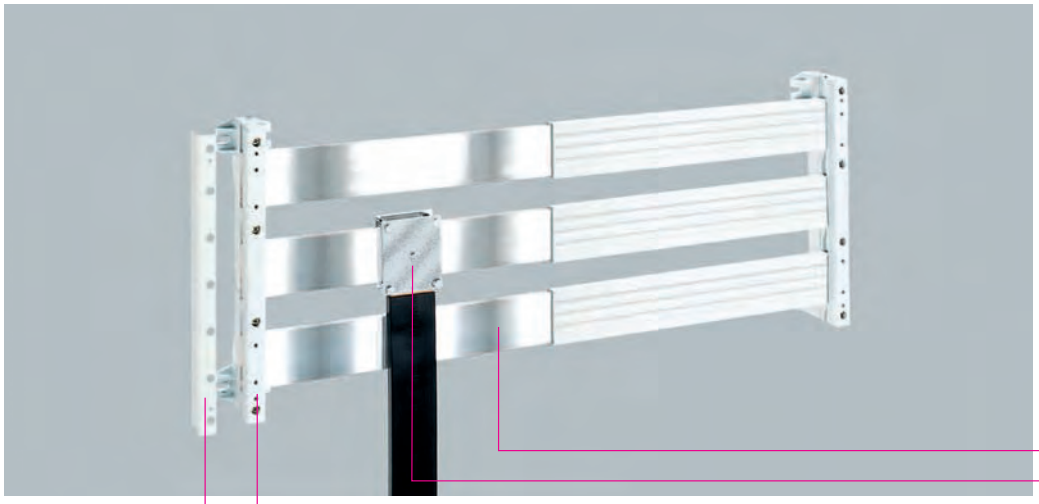

Universal busbar support 100mm, 3-pole

Type	Pack size	Weight kg/100 units		Part no.	
for undrilled busbars 30, 40, 50, 60 x 10	4	47.1		01 479	06

End cover

for busbar support 01 479	10	5.3		01 254	06

Standard copper busbar, tin-plated, length 2.40m, shorter lengths on request

Dimensions	Current capacity*	Pack size	Weight kg/100 units		Part no.	
30 x 10	630A	1	640.8		01 625	06
40 x 10	850A	1	854.4		01 626	06
50 x 10	1000A	1	1068.0		01 627	06
60 x 10	1250A	1	1281.6		01 628	06
for additional cross sections see page 2/2 and 4/5						
* see page 8/6						

Busbar cover, length 1m

30 x 10	10	10.1		01 245	06
30 – 60 x 10	5	17.6		01 251	06

Busbar connector, to connect flat busbars and flexible Cu

Terminal space W x L	Terminal space max height	Pack size	Weight kg/100 units		Part no.	
40 x 20	20	10	17.8		01 206	07
40 x 32	20	6	27.6		01 616	07
50 x 32	20	6	32.2		01 207	07
63 x 40	20	3	43.4		01 218	07
63 x 50	20	3	51.5		01 617	07

flexible copper busbars see page 7/5 and 7/6.

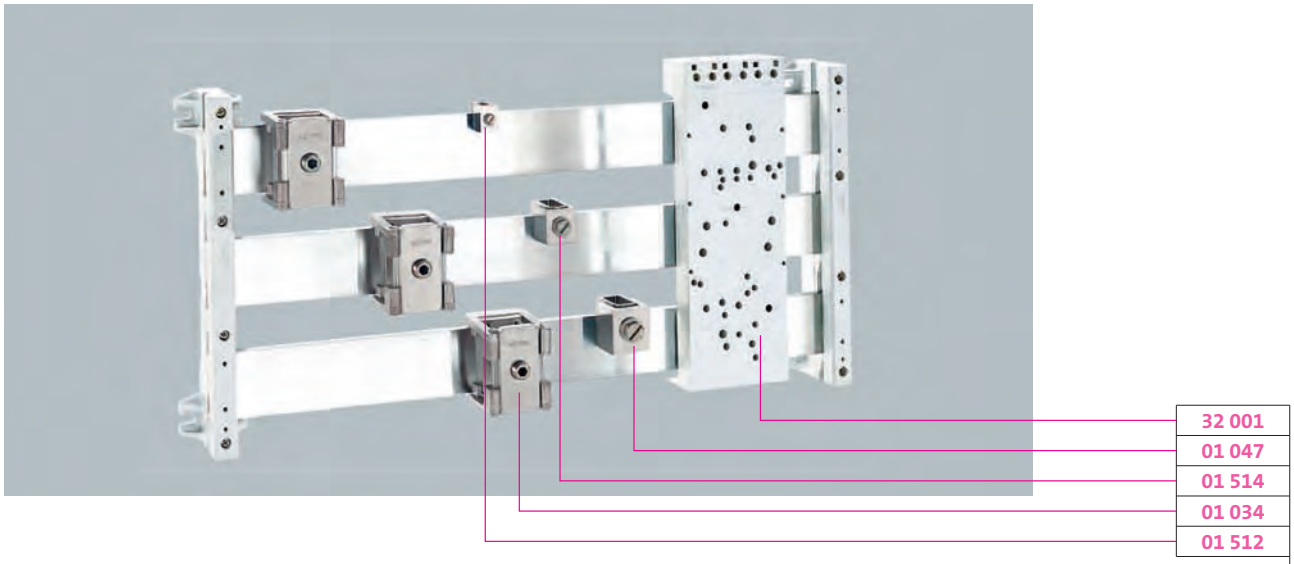

Universal conductor terminal, for 10mm thick busbars

Connection	Terminal space	For use	Pack size	Weight		Part no.	
min. – max.	W x H	up to max.		kg/100 units			
16 – 70mm², s(r), f, f + AE	14 x 14	400A	25	7.5		01 292	07
16 – 120mm², s(r), f, f + AE	17 x 15	440A	25	10.9		01 203	07

CRITO®ProfiClip, brace terminals

For busbars	Connection	For use	Pack size	Weight		Part no.	
		up to max.		kg/100 units			
20 x 5 – 30 x 10, double-T and triple-T section	for flat busbars up to 30 x 20	750A	6	30.3		01 319	07
	Cu and Al* 95 – 185mm², s(r), s(s), f	500A	6	31.2		01 318	07
	for flat busbars up to 32 x 20	800A	3	34.7		01 759	07
	Cu and Al* 120 – 300mm², s(r), s(s), f	600A	3	42.5		01 760	07

* not maintenance-free when aluminium conductors are used (see page 8/2)

Connection terminal

Busbars	Connection	Terminal space	For use	Pack size	Weight		Part no.	
min. – max.		W x H	up to max.		kg/100 units			
30 x 10	95 – 300 mm², sol(r), sol(s), s(s), f, f + AE	41 x 25	630A	3	85.7		01 094	07
30 x 10	flat busbars, fl. Cu	41 x 25	1250A	3	81.7		01 092	07
40 x 10	flat busbars, fl. Cu	41 x 25	1250A	3	89.3		01 032	07
50 x 10	flat busbars, fl. Cu	41 x 25	1250A	3	98.0		01 033	07
60 x 10	flat busbars, fl. Cu	41 x 25	1250A	3	104.6		01 034	07

Screw-type terminal, clip-on

Connection	Terminal space	For use	Pack size	Weight		Part no.	
	W x H	up to max.		kg/100 units			
for cable lug DIN 46 234	M 5 x 8	360A	25	5.0		01 512	07
	M 8 x 8	490A	20	16.5		01 514	07
	M 10 x 10	630A	6	36.2		01 047	07

Busbar adapter 200A, with clamp-type terminal 70mm²

Type	Adapter	Adapter	Pack size	Weight		Part no.	
	length	width		kg/100 units			
mounting plate: plastic	315	108	1	87.7		32 001	05

Mounting options for DIN rails and various switching devices, hole pattern, see www.woehner.de
http://www.woehner.de/de/produkte/32001.html → Downloads: 2D CAD symbol

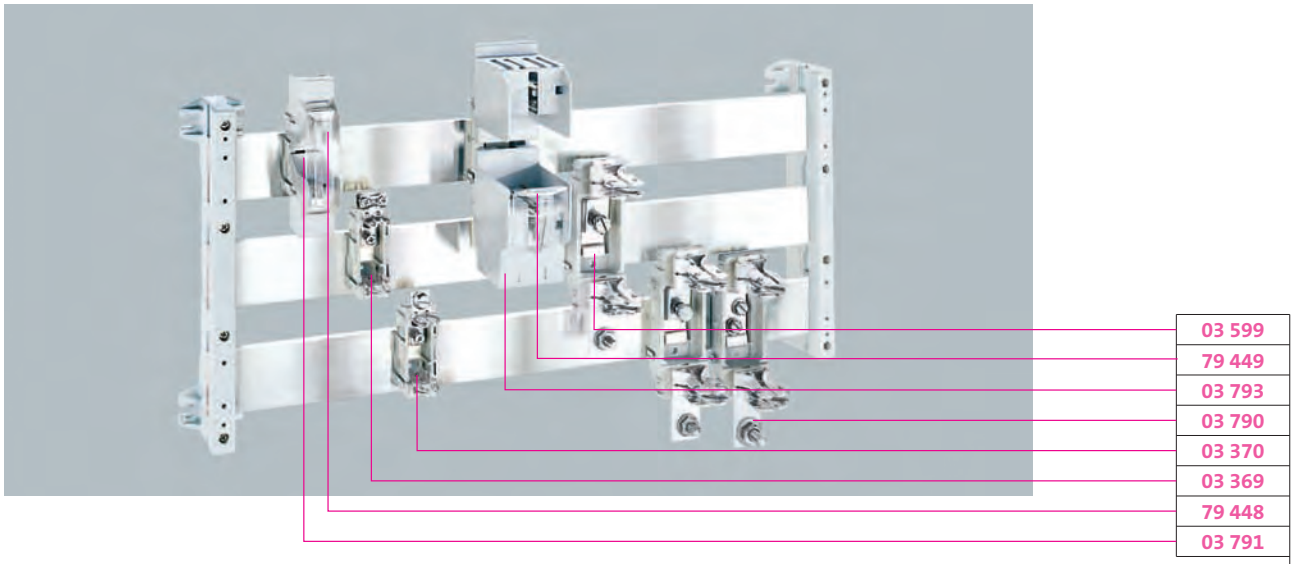

NH bus-mounting fuse base size 00 – 1– 2

Type	Rated current	Size	Pack size	Weight kg/100 units		Part no.	
clamp 70mm²	160A	00	10	14.9		03 369	10
screw M8	160A	00	10	14.2		03 370	10
screw M10	250A	1	3	54.0		03 384	10
screw M10	400A	2	3	75.8		03 599	10
1-pole, without shock protection, suitable for direct mounting on busbars							

NH bus-mounting fuse base size 00 – 1 – 2 – 3

screw M8	160A	00	10	11.5		03 587	10
screw M10	250A	1	3	46.0		03 601	10
screw M10	400A	2	3	68.5		03 795	10
screw M12	630A	3	3	45.9		03 790	10
1-pole, without shock protection, for screwing onto drilled busbars							

Protection cover, for 1-pole NH bus-mounting fuse base

Type	Size	Pack size	Weight kg/100 units		Part no.	
2 sections	00	10	3.5		03 791	10
	1	3	12.6		03 792	10
	2	3	17.1		03 793	10
	3	3	21.0		03 794	10

Grip lug cover, suitable for NH bases with shock protection

1 unit required to cover a fuse	00	30	1.2		79 448	10
2 units required to cover a fuse	1 – 3	30	1.5		79 449	10

NH inline fuse base size 00, 3-pole

Type	Rated current	Size	Pack size	Weight kg/100 units		Part no.	
wedge clamp terminal 70mm²	160A	00	1	99.5		33 384	12

Accessories	7 11,12	→
Technical data	8 23,32	→
Dimensions	9 25	→

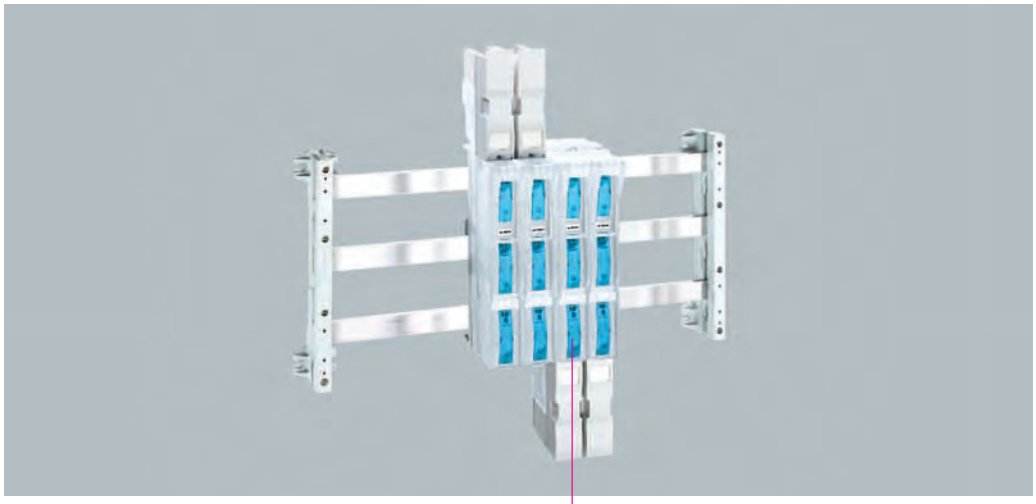

33 235

SECUR®LeanStreamer size 00, NH in-line fuse switch disconnector, 3-pole switching, bottom/top connection

Type	Rated current	Size	Pack size	Weight kg/100 units		Part no.	
clamp 70mm²/screw M8	160A	00	1	137.0		**33 235**	12
with terminal compartment cover, directly connectable in the 100mm-system							

SECUR®LeanStreamer size 00, NH in-line fuse switch disconnector, 3-pole switching, bottom/top connection, **with electronic fuse monitoring, 400V AC**

clamp 70mm²/screw M8	160A	00	1	143.0		**33 286**	12
with terminal compartment cover, directly connectable in the 100mm-system, circuit diagram for fuse monitoring on page 9/22							

Accessories, for SECUR®LeanStreamer 33 235

terminal clamp for assembly without drilling in the 100mm-system, on 10mm busbars	160A	00	3	3.1		**33 238**	12

Trim strips

for 33 235 in the 100mm-system		00	2	5.3		**33 036**	12

Support bracket

for fixing the front trims		00 – 3	4	0.5		**33 113**	12

Pilot switch, for monitoring lid position

Type	Size	Pack size	Weight kg/100 units		Part no.	
1 changeover switch 250V AC/5A; 30V DC/4A	00 – 3	1	1.1		**33 156**	09
flat push-on connector 2.8 x 0.5 (DIN 46 244-A)						

Connection accessories

clamp connector 1.5–70mm², for Cu conductors, s(r), f + AE; fl. Cu	00	3	1.5		**03 727**	09
M8 screw connector	00	3	1.4		**30 894**	09
wedge clamp terminal 16–70mm², for Cu and Al* conductors, s(r), s(s), f + AE	00	3	3.0		**33 224**	09
* not maintenance-free when aluminium conductors are used (see page 8/2)						

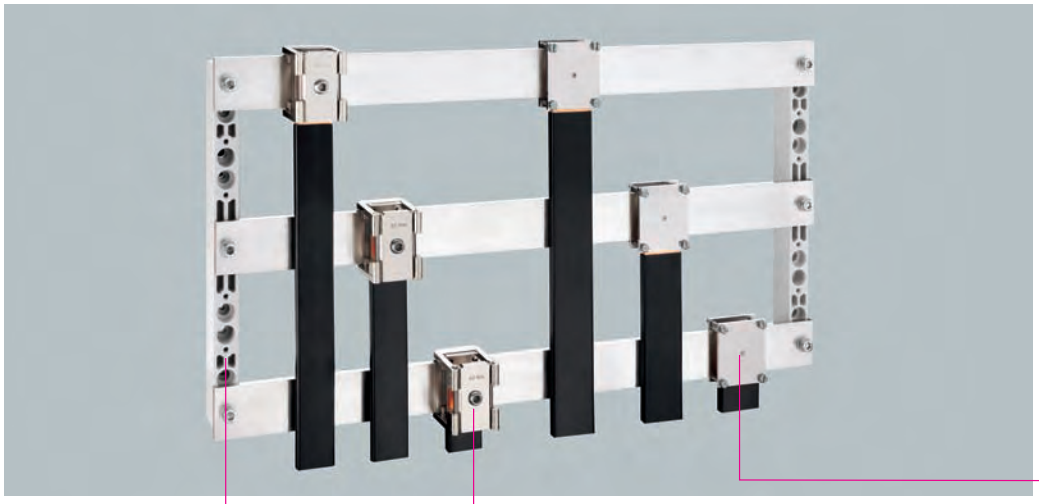

01 617
01 034
01 742

Busbar supports 185 mm, 3 pole

Type	Pack size	Weight		Part no.	
		kg/100 units			
for drilled flat busbars	6	70.3		01 742	06

Standard copper busbar, tinned, length 2.40m, shorter lengths on request

Dimensions	Rated	Pack size	Weight		Part no.	
W x H	current*		kg/100 units			
50 x 10	1000A	1	1068.0		01 627	06
60 x 10	1250A	1	1281.6		01 628	06
80 x 10	1500A	1	1708.8		01 765	06
100 x 10	1800A	1	2136.0		01 766	06
120 x 10	2100A	1	2563.0		01 767	06

* current capacity see page 8/6, further copper busbars see page 4/1

Busbar connector, to connect flat busbars and flexible Cu

Terminal space	Terminal space	Tightening	Pack size	Weight		Part no.	
W x L	max height	torque Nm		kg/100 units			
50 x 32	20	6	6	32.2		01 207	07
63 x 40	20	6	3	43.4		01 218	07
63 x 50	20	6	3	51.5		01 617	07
80 x 40	30	6	3	84.0		01 222	07

Connection terminal

Busbars	Connection	Terminal space	For use	Pack size	Weight		Part no.	
		W x H	up to max.		kg/100 units			
30 x 10	flat busbars, fl. Cu	41 x 25	1250A	3	81.7		01 092	07
40 x 10	flat busbars, fl. Cu	41 x 25	1250A	3	89.3		01 032	07
50 x 10	flat busbars, fl. Cu	41 x 25	1250A	3	98.0		01 033	07
60 x 10	flat busbars, fl. Cu	41 x 25	1250A	3	104.6		01 034	07

Screw-type terminal, clip-on, for cable lug DIN 46 234

Type	Connection	For use	Pack size	Weight		Part no.	
		up to max.		kg/100 units			
undrilled flat busbars, 10mm thick	M 5 x 8	360A	25	5.0		01 512	07
undrilled flat busbars, 10mm thick and double-T and triple-T section	M 8 x 8	490A	20	16.5		01 514	07
	M 10 x 10	630A	6	36.2		01 047	07

flexible copper busbars see page 7/5 and 7/6

Universal busbar support 185mm, 3 pole

Type	Pack size	Weight		Part no.	
		kg/100 units			
for undrilled flat busbars 30, 40, 50 ... 120 x 10 and section busbars	4	50.0		01 230	06
combined with SECUR®LeanStreamer size 1–3 can be mounted above. Terminal clamps can only be connected on busbars up to 60mm wide.					

End cover, for covering busbars ends, incl. mounting material

for part no. 01 230	2	2.8		33 341	06

Standard copper busbar, shorter lengths on request

Type	Length	Cross section*	Pack size	Weight		Part no.	
		mm^2		kg/100 units			
double-T section busbar, tin-plated	2.40m	500	1	1044.0		01 609	06
	2.40m	720	1	1540.0		01 608	06
triple-T section busbar, tin-plated	2.40m	1140	1	2436.0		01 187	06
* current capacity see page 8/7, further section busbars see page 2/4							

CRITO®PowerClip, brace terminal for busbars 30 x 10 and section busbars

Busbars	Terminal space	Applicable	Pack size	Weight		Part no.	
	W x H	up to max.		kg/100 units			
30 x 10, double-T and triple-T profile	55 x 28	1600A/2000A*	3	50.0		01 069	07
	68 x 28	1600A/2000A*	3	63.0		01 070	07
	105 x 28	1600A/2800A*	3	84.0		01 071	07
for the connection of flat and flexible copper busbars							
* in case of centre feed							

Profile terminal, connection at front and back of busbar section

Connection	Section	Terminal space	For use	Pack size	Weight		Part no.	
		W x H	up to max.		kg/100 units			
320 – 800mm^2	double-T	41 x 20 – 42	1600A	3	67.0		01 185	07
500 – 750mm^2	double-T	51 x 5 – 28	1600A	3	70.5		01 906	07
600 – 900mm^2	double-T	64 x 5 – 28	1600A	3	84.0		01 907	07
500 – 1000mm^2	double-T	51 x 20 – 42	1600A / 2000A*	3	73.5		01 936	07
600 – 1200mm^2	double-T	64 x 20 – 42	1600A / 2000A*	3	85.9		01 911	07
800 – 1600mm^2	double-T	81 x 20 – 42	1600A / 2500A*	3	101.1		01 934	07
1000 – 2000mm^2	double-T	101 x 20 – 42	1600A / 2800A*	3	113.7		01 935	07
320 – 800mm^2	triple-T	41 x 23 – 45	1600A	3	105.0		01 513	07
500 – 1260mm^2	triple-T	64 x 23 – 45	2000A / 2500A*	3	124.0		01 008	07
1200 – 3600mm^2	triple-T	101 x 23 – 45	2500A / 3200A*	3	172.7		01 186	07
can also be used on circuit-breaker connection								
* for centre feeding								

flexible copper busbars see page 7/5 and 7/6

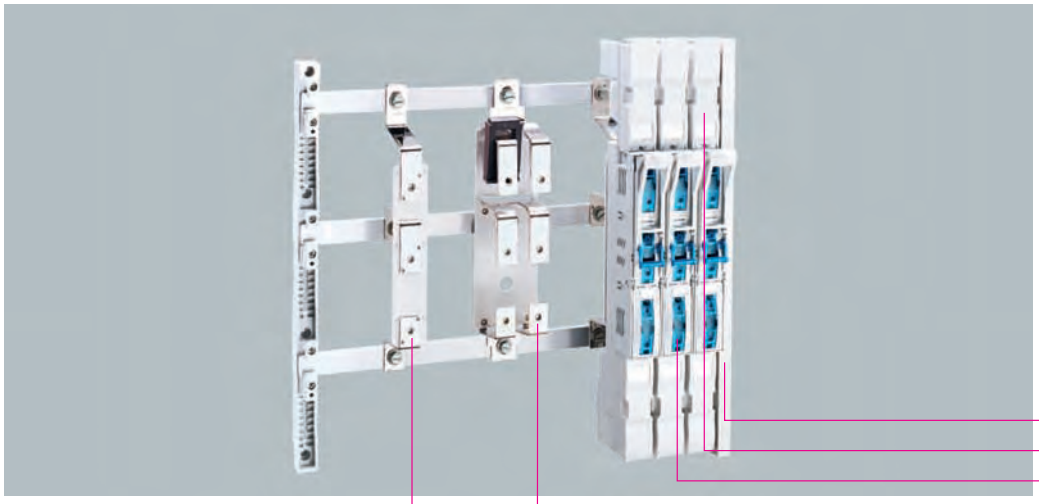

SECUR®LeanStreamer size 00, NH in-line fuse switch disconnector, 3-pole switching, bottom/top connection

Type	Rated current	Size	Pack size	Weight kg/100 units		Part no.	
clamp 70mm²/screw M8	160A	00	1	137.0		33 235	12
with terminal compartment cover, directly connectable in the 185mm-system power 33 236, 33 237 and 33 282							

SECUR®LeanStreamer size 00, NH in-line fuse switch disconnector, 3-pole switching, bottom/top connection, **with electronic fuse monitoring, 400V AC**

clamp 70mm²/screw M8	160A	00	1	143.0		33 286	12
with terminal compartment cover, for use in the 185mm-system power with adapter 33 236, 33 237 and 33 282; circuit diagram for fuse monitoring on page 9/22							

Adapter for SECUR®LeanStreamer 33 235

single, screw-on	160A	00	1	52.0		33 236	12
double, screw-on	2 x 160A	00	1	104.0		33 237	12
single, terminal clamp for assembly without drilling*	160A	00	1	62.0		33 282	12
connecting space cover or equalising trim for the extension in the 185mm-system power	160A	00	2	9.0		33 280	12
current transformer fixing clip for adapter; current transformers in chapter 4/9		00	3	0.4		33 300	12
* on 10mm busbars, double-T and triple-T section							

Accessories

Type	Size	Pack size	Weight kg/100 units		Part no.	
pilot switch for monitoring lid position 1 changeover switch 250V AC / 5A; 30V DC / 4A flat push-on connector 2.8 x 0.5 (DIN 46 244-A)	00 – 3	1	1.1		33 156	09
support angle for fixing front trims	00 – 3	4	0.5		33 113	12
trim strips for the 185mm-system power trims for outer units can be screwed on from side	00 – 3	2	10.7		33 257	12

Connection accessories

clamp connector 1.5–70mm², for Cu conductors, s(r), f + AE; fl. Cu	00	3	1.5		03 727	09
M8 screw connector	00	3	1.4		30 894	09
wedge clamp terminal 16–70mm², for Cu and Al* conductors, s(r), s(s), f + AE	00	3	3.0		33 224	09
* not maintenance-free when aluminium conductors are used (see page 8/2)						

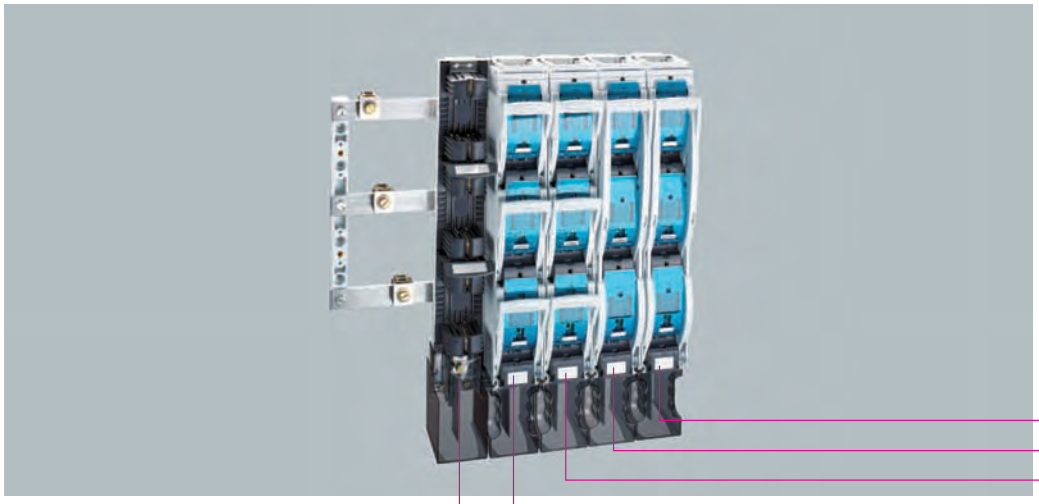

33 097
33 099
33 093
33 095
33 087

SECUR®LeanStreamer size 1 – 2 – 3, NH in-line fuse switch disconnector, 3-pole switching, bottom/top connection

Type	Rated current	Size	Pack size	Weight kg/100 units		Part no.	
screw M10	250A	1	1	520.0		33 097	12
screw M10	400A	2	1	630.0		33 098	12
screw M12	630A	3	1	700.0		33 099	12
V-direct connection	250A	1	1	560.0		33 243	12
V-direct connection	400A	2	1	670.0		33 244	12
V-direct connection	630A	3	1	750.0		33 245	12

SECUR®LeanStreamer size 1 – 2 – 3, NH in-line fuse switch disconnector, 1-pole switching, bottom/top connection

screw M10	250A	1	1	520.0		33 093	12
screw M10	400A	2	1	630.0		33 094	12
screw M12	630A	3	1	700.0		33 095	12

SECUR®LeanStreamer size 1 – 2 – 3, in-line fuse switch disconnector, 3-pole switching, bottom/top connection,
with electronic fuse monitoring, 400V AC

screw M10	250A	1	1	520.0		33 287	12
screw M10	400A	2	1	630.0		33 288	12
screw M12	630A	3	1	700.0		33 289	12
circuit diagram for fuse monitoring on page 10/18							

SECUR®LeanStreamer size 1 – 2 – 3, NH fuse block, open type, bottom/top connection

screw M10	250A	1	1	430.0		33 087	12
screw M10	400A	2	1	450.0		33 088	12
screw M12	630A	3	1	535.0		33 089	12

SECUR®LeanStreamer 1250A, 2x size 3
double-NH fuse switch disconnector, 3-pole switching, bottom/top connection

Type	Rated current	Size mm^2	Pack size	Weight kg/100 units		Part no.	
4 x screw M12	1250A	2 x 3	1	1400.0		33 321	12

Accessories	**7** 11,12	→
Technical data	**8** 32,33,34	→
Dimensions	**9** 26,27	→

33 301	33 267	33 269	33 273

Accessories

for SECUR® LeanStreamer

Trim strips

Type	Size	Pack size	Weight		Part no.	
		kg/100 units				
for open and switch fuse units	1 – 3	2	10.7		33 257	12
trims for outer units can be screwed on from side						

Terminal clamp, for assembly without drilling in the 185mm system, on 10mm busbars, double-T and triple-T section

for bottom connection	1 – 3	3	21.7		33 301	12
for top connection	1 – 3	3	21.7		33 101	12

Pilot switch, for monitoring lid position

1 changeover switch 250V AC/5A; 30V DC/4A	00 – 3	1	1.1		33 156	09
flat push-on connector 2.8 x 0.5 (DIN 46 244-A)						

Support bracket

for fixing the front trims	00 – 3	4	0.5		33 113	12

Connection accessories

Type	Size	Connection	Pack size	Weight		Part no.	
		mm²		kg/100 units			
clamp connector for Cu conductors, s(r), f + AE; fl. Cu	1 – 3	120 – 140 / 21 x 1 – 12	1	10.6		33 164	09
wedge clamp terminal, single, for Cu and Al* conductors, s(r), s(s), f, f + AE; fl. Cu	1 – 3	120 – 240 / 21 x 10 – 21	1	19.9		33 167	09
wedge clamp terminal, double, for Cu conductors, s(r), s(s), f, f + AE (600A)	1 – 3	2 x 120 – 185	3	28.7		33 372	12
direct connection terminal for Cu and Al* conductors	1 – 2	35 – 70 rm 35 – 150 sm 35 – 185 se	3	8.3		33 267	12
	3	35 – 70 rm 35 – 150 sm 35 – 185 se	3	10.1		33 268	12
D-direct connection terminal for two copper and aluminium conductors	1 – 2	2 x 35 – 70 rm 2 x 35 – 150 sm 2 x 35 – 185 se	3	9.6		33 269	12
	3	2 x 35 – 70 rm 2 x 35 – 150 sm 2 x 35 – 185 se	3	11.3		33 270	12
V-direct connection for Cu and Al* conductors	1 – 2	50 – 185 rm 70 – 240 sm 95 – 300 se	3	14.5		33 273	12
	3	120 – 300 rm 120 – 240 sm 150 – 300 se	3	25.5		33 274	12
connection extension for 2 cable lugs	1 – 2		1	13.2		33 271	12
	3		1	15.5		33 272	12
* not maintenance-free when aluminium conductors are used (see page 8/2)							

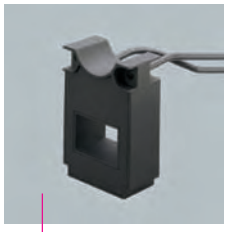
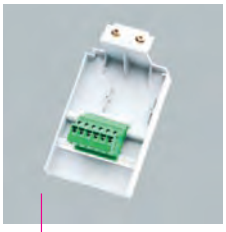

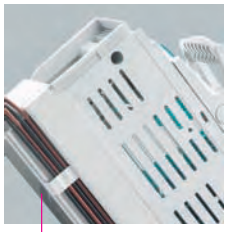

33 126		33 292		33 323		33 300		33 373	

Accessories

for SECUR® LeanStreamer

Current transformer, precision class 1, rated secondary current 5A, flat push-on connector 6.3 x 0.8 (DIN 46 244-A)

Type	Rated current	Size	Rated apparent power VA	Pack size	Weight kg/100 units		Part no.	
for direct mounting in the SECUR®LeanStreamer*; for size 00 using an adapter requires a fixing clip	150A	00 – 3	3	3	14.0		33 126	12
	200A	00 – 3	3	3	14.3		33 127	12
	250A	00 – 3	4	3	14.4		33 128	12
	300A	00 – 3	5	3	14.3		33 173	12
	400A	00 – 3	5	3	14.7		33 174	12
	500A	00 – 3	5	3	15.0		33 179	12
	600A	00 – 3	5	3	15.3		33 180	12
current transformer fixing clip Application in 185mm-system power with adapter 33 236, 33 237 and 33 282		00		3	0.4		33 300	12

* The transformer cannot be combined in conjunction with the terminal clamp with the following busbars: terminal clamp 33 301 and 33 101 with 100mm and 120mm busbars.

Current transformer, suitable for calibration, precision class 0.5, rated secondary current 5A, conductor cross section 2.5mm², conductor length 1.5m

for direct mounting in the SECUR®LeanStreamer*; for size 00 using an adapter requires a fixing clip	200A	00 – 3	1.5 **	3	28.0		33 292	12
	250A	00 – 3	2.5 **	3	28.0		33 294	12
	300A	00 – 3	2.5 **	3	28.0		33 296	12
	400A	00 – 3	2.5 **	3	28.0		33 298	12
current transformer fixing clip Application in 185mm-system power with adapter 33 236, 33 237 and 33 282		00		3	0.4		33 300	12

* The transformer cannot be combined in conjunction with the terminal clamp with the following busbars: terminal clamp 33 301 with 120mm busbars and 33 101 with 80mm, 100mm and 120mm busbars.

** Rat. apparent power at the conductor end: calibrated transformer available on request (nat. laws must be taken into account)

Fixing clip, for conductors

Type	Size	Pack size	Weight kg/100 units		Part no.	
for connecting on the back side, 6 pieces per SECUR® LeanStreamer	1 – 3	12	0.9		33 373	12

Component support

with mounting rail	1 – 3	1	15.0		33 375	12
with mounting rail and 6-pole plug-in connector	1 – 3	1	21.0		33 323	12

Mounting rail

for component supports for mounting on an additonal plug-in connector	1 – 3	10	2.0		30 930	05

Plug-in connector

6-pole terminal strips with plug component	00 – 3	1	5.9		33 322	12

Connection space cover

for component supports	1 – 3	1	23.0		33 281	12

Quality

Panel-mounting components

For conventional cabling, Wöhner offers a comprehensive range of panel components suitable for either plate or DIN-rail mounting. Fuses and the associated connection technology meet the highest safety and quality requirements set by international standards.

CUSTO®EasyBase
Space-saving fuse base D01 and D02 for mounting in the 45mm standard field section. The large dual function terminal allows direct convenient connection for all conductor types. The integrated cover and extensive shock protection provide a high degree of safety during installation, operation and maintenance.

TRITON®
Fully shock-protected fuse base according to DIN EN 50274 / BGV A3. For clip-on attachment or screw-mounting onto mounting rails according to DIN EN 60715. 1- and 3-pole models for D01, D02, DII and DIII.

AMBUS®EasySwitch
The mounting for the cylindrical fuses is for currents up to 32A (10 x 38) and only 18mm wide. With a short-circuit rating up to 100kA and a shock protection according to VDE 0106, the circuits up to 690V can be protected up to 80A (22 x 58, at 400V up to 125A). Versions with neutral conductor, LED, for semiconductor fuses, DC applications up to 1000V and with pilot switch available.

AMBUS®EasySwitch Class CC
For class CC fuses according to UL 248-4 up to 30A. According to American standards with a short-circuit rating up to 200kA. Versions with LED for fuse monitoring available.

AMBUS®J-Carrier
QUADRON®J-Carrier
For Class J fuses in compliance with UL 248-8. Compliant with American standard for fuses with a short-circuit capacity of up to 200kA. The design also protects from contact as required in many applications.

NH Fuse Bases and Neutral Conductors
Single-pole and three-pole NH fuse bases can be used to protect circuits up to 630A/690V. Matching disconnectable neutral conductor with an optimised design are also available.

AMBUS®EasySwitch

Holder for fuses 10 x 38

Version for photovoltaic applications up to 1000V DC

Models with LED for fuse monitoring

AMBUS®EasySwitch

Holder for fuses 10 x 85 and 14 x 85

Version for photovoltaic applications up to 1500V DC

Extensive shock protection, simple fuse changes

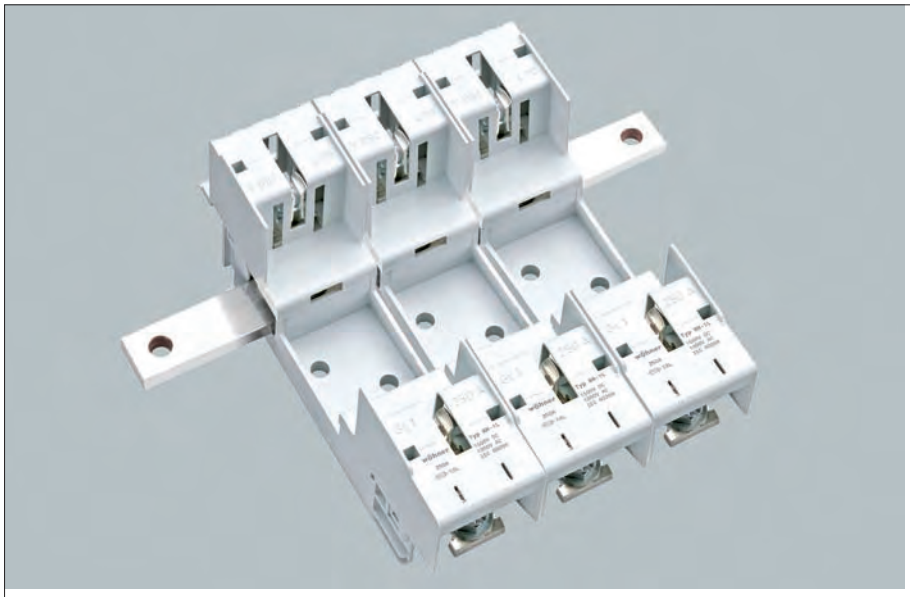

NEW

NH fuse base

Holder for NH fuses, size 1XL (189mm long)

Version for photovoltaic applications up to 1500V DC

Model for internal busbars up to 2 x 30 x 10mm

Extensive shock protection

Variable connection position

Panel fuse holder for photovoltaic applications:

AMBUS®EasySwitch

With its compact design for 10 x 38 fuses, this is the standard device in generator connection boxes. In the case of fuses belonging to class gPV, the area of application covers maximum 32A at up to 1000V DC. With a width of only 18mm, positioned for comfortable connection and featuring snap-in mounting on mounting rails, the AMBUS®EasySwitch can easily be installed in rows. The swivel handle allows for comfortable and safe fuse changes, with the holder designed for extensive shock protection. The LED model indicates the tripped fuse.
For higher-level requirements, the AMBUS®EasySwitch is suitable for fuses 10 x 85 and 14 x 85: The holder is designed for voltages of up to 1500V DC. The fuses now achieve a current value of 25A; the maximum power dissipation for the fuse amounts to 6W. Its operation is extremely simple; just pull the handle to interrupt the electric circuit. The fuse carrier can then be completely removed; there is no need to touch the fuse. A cover prevents any inadvertent touching of the contacts in the holder. A comfortable connection position and snap-in mounting on the mounting rail add to the ease of operation.

NH fuse base

For gPV fuses with long fuse bodies. Can be used in the NH 1 XL version up to 250A at up to 1500V. The holder provides extensive shock protection and variable connection area, which can be equipped with connection screw M10 or wedge clamp terminals for the connection of aluminium conductors, etc. The NH base is designed to be screwed to the mounting plate. The model for busbar connection permits the use of shock-protected internal busbars up to 2 x 30 x 10mm.

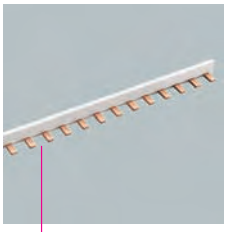

31 971		31 973		31 555		31 548		31 559	

AMBUS®EasySwitch for photovoltaic

Holder for cylindrical fuses

with box terminals, snap-in mounting, shock protection as per DIN EN 50274.

AMBUS®EasySwitch, holder for cylindrical fuses, **solar powerVersion**

Size	Rated current / Rated voltage	Type	Width mm	Connection mm^2	Pack size	Weight kg/100 units		Part no.	
10 x 38	32A / 1000V DC	1-pole	18	0.75 – 25	12	6.3		31 971	17
10 x 38	32A / 1000V DC	1-pole with LED*	18	0.75 – 25	12	6.8		31 973	17
10/14 x 85	25A / 1500V DC	1-pole	23	0.75 – 25	5	9.2		31 555	17
* LED indicates blown fuse									

Comb-type busbars, 1000V DC

Type	Supply centre	Supply side	Cross section mm^2	Pack size	Weight kg/100 units		Part no.	
1-pole, insulated, bridge, pitch 18mm	130A	80A	16	25	21.8		31 101	06
1-pole, insulated, bridge, pitch 18mm	200A	100A	25	10	47.5		31 548	06

Connecting terminal, for comb-type busbars

Type	Pack size	Weight kg/100 units		Part no.	
for 31 101, side connection up to $25mm^2$	50	1.2		31 103	07
for 31 101, front connection up to $25mm^2$	50	1.2		31 157	07
for 31 548, front connection up to $35mm^2$	10	3.5		31 550	07

Use of gPV fuses, as per IEC/EN 60 269-6 for photovoltaic applications

Size	Rated current	Rated voltage	Rated short circuit breaking capacity	Power output	Pack size	Weight kg/100 units		Part no.	
10 x 38 (gPV)	10A	1000V DC	30kA / 1000V DC	1.5W	10	0.6		31 544	17
	12A	1000V DC	30kA / 1000V DC	1.6W	10	0.6		31 545	17
	16A	1000V DC	30kA / 1000V DC	2.1W	10	0.6		31 546	17
	20A	1000V DC	30kA / 1000V DC	2.5W	10	0.6		31 547	17
14 x 85 (gPV)	16A	1100V DC	30kA / 1100V DC	3.8W	10	2.7		31 560	17
	20A	1100V DC	30kA / 1100V DC	4.7W	10	2.7		31 559	17
	25A	1000V DC	30kA / 1000V DC	5.9W	10	2.7		31 558	17

03 290	03 289	01 602	01 536	31 956

NH fuse base for Photovoltaic

NH fuse base size 1XL, 1-pole, with shock protection

for uses of fuses size 1XL (189mm long)

Type	Rated current	Rated voltage	Size	Pack size	Weight kg/100 units		Part no	
M10 screw on both sides	250A	1000V AC / 1500V DC	1XL	3	53.0		03 290	10
incoming connection M10 screw, outgoing connection busbar 30 x 10	250A	1000V AC / 1500V DC	1XL	3	57.0		03 289	10

Accessories

Type	Size	Pack size	Weight kg/100 units		Part no	
grip lug cover	1XL	30	1.5		79 449	10

Type	Connection mm^2	Size	Pack size	Weight kg/100 units		Part no	
wedge clamp terminal, for Cu and Al* conductors rm, sm, f	50 – 240	1XL	1	19.9		33 167	09

2-pole busbar system for photovoltaic

1000 V DC

Universal-busbar system

Type	Busbar	Pack size	Weight kg/100 units		Part no	
2-pole with internal screw holes	12, 20, 30 x 5, 10	1	8.3		01 602	06

Cover cap

Type	Pack size	Weight kg/100 units		Part no	
for mounting to busbar support 01 602	1	5.3		01 536	07

AMBUS®EasyLiner, bus-mounting fuse holder, **2-pole,** 2-pole isolation, with spring terminals

Type	Rated current / Rated voltage	Pack size	Weight kg/100 units		Part no	
for fuses 10 x 38 IEC 60 269-6	32A / 1000V DC	6	12.2		31 956	01
for fuses 10 x 38 IEC 60 269-6 **with LED** 400–1000 V DC	32A / 1000V DC	6	12.2		31 960	01

Fuses are not included in delivery see page 5/1.

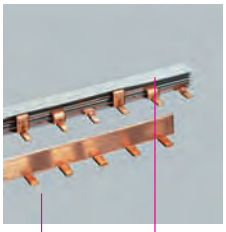

31 301 | 31 303 | 31 302 | 31 306 | 31 001 | 31 012 | 31 028

CUSTO® EasyBase

D0 panel-mounting fuse base, shock protected design,
dual function terminal on both sides

CUSTO® EasyBase, fuse base, pitch 27mm

Thread / rated current / rated voltage	Type	Connection mm²	Pack size	Weight kg/100 units		Part no.	
E 14 / 16A / 400V AC, 250V DC	1-pole	1.5 – 35	9	7.6		31 301	03
	3-pole	1.5 – 35	3	23.0		31 302	03
E 18 / 63A / 400V AC, 250V DC	1-pole	1.5 – 35	9	7.6		31 303	03
	3-pole	1.5 – 35	3	23.0		31 306	03

Comb-type busbar, pitch 27mm, length 1m

Type	Supply centre	Supply side	Cross section mm²	Pack size	Weight kg/100 units		Part no.	
1-pole, plain, bridge	200A	100A	30	10	31.5		31 001	06
1-pole, insulated, bridge	130A	80A	16	25	19.0		31 014	06
1-pole, insulated, bridge	220A	130A	35	10	50.0		31 057	06
3-pole, insulated, bridge, 400V	130A	80A	16	10	56.2		31 012	06
3-pole, insulated, bridge, 400V	220A	130A	35	4	125.0		31 056	06

Connecting terminal, for comb-type busbar as bridge version

for 1-pole comb-type busbars 16mm², side connection up to 50mm²	25	2.5		31 028	07
for 3-pole comb-type busbars 16mm², side connection up to 50mm²	25	2.9		31 029	07
for 3-pole comb-type busbars 16mm², front connection up to 50mm²	25	2.9		31 085	07
for 1-pole comb-type busbars 35mm², front connection up to 95mm²	3	9.0		01 198	07
for 3-pole comb-type busbars 35mm², front connection up to 95mm²	3	9.3		01 228	07
a connecting terminal is needed for each phase					

End cap

for 3-pole comb-type busbars 16mm²	50	0.1		31 027	06
for 3-pole comb-type busbars 35mm²	10	0.2		31 084	06

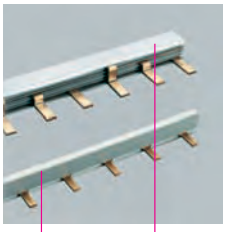

31 286 | 31 288 | 31 014 | 31 012 | 01 198 | 31 028 | 31 086

TRITON®

D0 panel-mounting fuse base, shock protection in accordance with DIN EN 50274 / **BGV A3** for industrial applications
with dual function terminal on supply side, box terminal on outgoing side, with clip-on mounting

TRITON®, fuse base, pitch 27mm

Thread / rated current / rated voltage	Type	Connection mm²	Pack size	Weight kg/100 units		Part no.	
E 14 / 16A / 400V AC, 250V DC	1-pole	1.5 – 35	9	12.8		31 286	02
	3-pole	1.5 – 35	3	38.4		31 288	02
E 18 / 63A / 400V AC, 250V DC	1-pole	1.5 – 35	9	13.9		31 291	02
	3-pole	1.5 – 35	3	41.4		31 293	02

Comb-type busbar, pitch 27mm, length 1m

Type	Supply centre	Supply side	Cross section mm²	Pack size	Weight kg/100 units		Part no.	
1-pole, insulated, fork	130A	80A	16	25	24.6		31 024	06
3-pole, insulated, fork, 400V	130A	80A	16	10	56.0		31 026	06
1-pole, insulated, bridge	130A	80A	16	25	19.0		31 014	06
1-pole, insulated, bridge	220A	130A	35	10	50.0		31 057	06
3-pole, insulated, bridge, 400V	130A	80A	16	10	56.2		31 012	06
3-pole, insulated, bridge, 400V	220A	130A	35	4	125.0		31 056	06

End cap, for insulated comb-type busbars

for 3-pole comb-type busbars 16mm²	50	0.1		31 027	06
for 3-pole comb-type busbars 35mm²	10	0.2		31 084	06

Connection terminal, for comb-type busbar as bridge version

for 1-pole comb-type busbars 16mm² side connection up to 50mm²	25	2.5		31 028	07
for 3-pole comb-type busbars 16mm², side connection up to 50mm²	25	2.9		31 029	07
for 3-pole comb-type busbars 16mm², front connection up to 50mm²	25	2.9		31 085	07
for 1-pole comb-type busbars 35mm², front connection up to 95mm²	3	9.0		01 198	07
for 3-pole comb-type busbars 35mm², front connection up to 95mm²	3	9.3		01 228	07
a connecting terminal is needed for each phase					

Label holder

Type	Pack size	Weight kg/100 units		Part no.	
for clipping onto all Triton fuse bases	100	0.1		31 086	02
for label 78 801 and clip-on tag (for example, Siemens)					

Label

clip, 20 x 9mm	100	0.1		31 004	03
self-adhesive labels (108 pieces per A5 sheet)	1	0.4		78 801	02

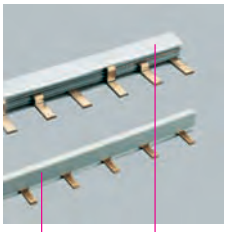

31 173 | 31 175 | 31 174 | 31 176 | 31 086 | 31 309 | 31 310

TRITON®

D panel-mounting fuse base, shock protection in accordance with DIN EN 50274 / **BGV A3** for industrial applications
with dual function terminal on supply side, box terminal on outgoing side, with clip-on mounting and screw mounting

TRITON®, D panel-mounting fuse base

Thread / rated current / rated voltage	Type	Connection mm²	Pack size	Weight kg/100 units		Part no.	
E 27 / 25A / 500V AC, DC	1-pole	1.5 – 35	9	15.2		31 173	02
E 27 / 25A / 500V AC, DC	3-pole	1.5 – 35	3	45.7		31 174	02
E 33 / 63A / 500V AC, DC*	1-pole	1.5 – 35	9	18.6		31 175	02
E 33 / 63A / 500V AC, DC*	3-pole	1.5 – 35	3	53.8		31 176	02

Comb-type busbar, insulated, length 1m

Type	Supply centre	Supply side	Cross section mm²	Pack size	Weight kg/100 units		Part no.	
1-pole, bridge, for 31 173	130A	80A	16	25	21.5		31 309	06
3-pole, bridge, for 31 174, 400V	130A	80A	16	10	51.4		31 310	06
1-pole, bridge, for 31 175	130A	80A	16	25	21.0		31 311	06
3-pole, bridge, for 31 176, 400V	130A	80A	16	10	50.5		31 312	06

End cap, for insulated comb-type busbars

for 3-pole comb-type busbars 16mm²		50	0.1		31 027	06

Connection terminal, for isolated comb-type busbars

for 1-pole comb-type busbars 16mm², side connection up to 50mm²	25	2.5		31 028	07
for 3-pole comb-type busbars 16mm², side connection up to 50mm²	25	2.9		31 029	07
for 3-pole comb-type busbars 16mm², front connection up to 50mm²	25	2.9		31 085	07
a connecting terminal is needed for each phase					

Label holder

Type	Pack size	Weight kg/100 units		Part no.	
for clipping onto all Triton fuse bases	100	0.1		31 086	02
for label 78 801 and clip-on tag (for example, Siemens)					

Label

clip, 20 x 9mm	100	0.1		31 004	03
self-adhesive labels (108 pieces per A5 sheet)	1	0.4		78 801	02

* as per DIN VDE 0636-3011 also 690V AC / 600 V DC

UL-certified products are highlighted in grey

31 105		31 110		31 123		31 273	

AMBUS® EasySwitch

Holder for cylindrical fuses with box terminals,
clip-on mounting, shock protection in accordance with DIN EN 50274

AMBUS® EasySwitch, holder for cylindrical fuses, **standard model, without neutral conductor**

Size	Rated current / Rated voltage	Type	Width mm	Connection	Pack size	Weight kg/100 units		Part no.	
8 x 31	25A / 400V AC, 250V DC	1-pole	18	1.5 – 25mm²	12	6.3		31 105	17
10 x 38	32A / 690V AC, 440V DC	1-pole	18	0.75 – 25mm² / AWG 18 – 4	12	6.3		31 110	17
		2-pole	36	0.75 – 25mm² / AWG 18 – 4	6	12.8		31 112	17
		3-pole	54	0.75 – 25mm² / AWG 18 – 4	4	19.3		31 113	17
14 x 51	50A / 690V AC, 440V DC	1-pole	27	1.5 – 35mm² / AWG 14 – 2	6	9.7		31 115	17
		2-pole	54	1.5 – 35mm² / AWG 14 – 2	3	20.2		31 117	17
		3-pole	81	1.5 – 35mm² / AWG 14 – 2	2	30.4		31 118	17
22 x 58	125A / 690V AC, 440V DC	1-pole	36	4 – 50mm² / AWG 10 – 1/0	6	15.8		31 120	17
		2-pole	72	4 – 50mm² / AWG 10 – 1/0	3	32.2		31 122	17
		3-pole	108	4 – 50mm² / AWG 10 – 1/0	2	48.6		31 123	17

AMBUS® EasySwitch, holder for cylindrical fuses, **standard model, neutral conductor mounted on the right**

10 x 38	32A / 690V AC, 440V DC	1-pole + N	36	0.75 – 25mm² / AWG 18 – 4	6	13.3		31 111	17
		3-pole + N	72	0.75 – 25mm² / AWG 18 – 4	3	27.1		31 114	17
14 x 51	50A / 690V AC, 440V DC	1-pole + N	54	1.5 – 35mm² / AWG 14 – 2	3	21.8		31 116	17
		3-pole + N	108	1.5 – 35mm² / AWG 14 – 2	1	42.7		31 119	17
22 x 58	125A / 690V AC, 440V DC	1-pole + N	72	4 – 50mm² / AWG 10 – 1/0	3	35.8		31 121	17
		3-pole + N	144	4 – 50mm² / AWG 10 – 1/0	1	67.5		31 124	17

AMBUS® EasySwitch, holder for cylindrical fuses, **standard model, neutral conductor mounted on the left**

10 x 38	32A / 690V AC, 440V DC	1-pole + N int.	18	1.5 – 10mm²	12	9.0		31 273	17
		3-pole + N int.	54	1.5 – 10mm²	4	22.0		31 274	17
14 x 51	50A / 690V AC, 440V DC	3-pole + N	108	1.5 – 35mm² / AWG 14 – 2	1	42.7		31 168	17
22 x 58	125A / 690V AC, 440V DC	3-pole + N	144	4 – 50mm² / AWG 10 – 1/0	1	67.5		31 171	17

AMBUS® EasySwitch, mounting for cylindrical fuses, **N-Module**

8 x 31		N	18	1.5 – 25mm²	12	7.1		31 233	17
10 x 38		N	18	0.75 – 25mm² / AWG 18 – 4	12	6.9		31 258	17

UL-certified products are highlighted in grey

31 130		31 276		31 940		31 941	

AMBUS® EasySwitch

Holder for cylindrical fuses

with box terminals, clip-on mounting, shock protection in accordance with DIN EN 50274

AMBUS® EasySwitch, holder for cyl. fuses, **model for semiconductor fuses**

Size	Rated current / Rated voltage	Type	Width mm	Connection	Pack size	Weight kg/100 units		Part no.	
10 x 38	32A / 690V AC, 440V DC	1-pole	18	0.75 – 25mm² / AWG 18 – 4	12	6.3		31 275	17
		2-pole	36	0.75 – 25mm² / AWG 18 – 4	6	12.7		31 276	17
		3-pole	54	0.75 – 25mm² / AWG 18 – 4	4	19.3		31 277	17
14 x 51	50A / 690V AC, 440V DC	1-pole	27	1.5 – 35mm² / AWG 14 – 2	6	9.7		31 278	17
		2-pole	54	1.5 – 35mm² / AWG 14 – 2	3	20.2		31 279	17
		3-pole	81	1.5 – 35mm² / AWG 14 – 2	2	30.4		31 280	17
22 x 58	125A / 690V AC, 440V DC	1-pole	36	4 – 50mm² / AWG 10 – 1/0	6	15.8		31 281	17
		2-pole	72	4 – 50mm² / AWG 10 – 1/0	3	32.2		31 282	17
		3-pole	108	4 – 50mm² / AWG 10 – 1/0	2	48.6		31 283	17

AMBUS® EasySwitch, holder for cyl. fuses, **model with LED 110 – 690V AC/DC**

10 x 38	32A / 690V AC, 440V DC	1-pole	18	0.75 – 25mm² / AWG 18 – 4	12	6.8		31 130	17
		2-pole	36	0.75 – 25mm² / AWG 18 – 4	6	13.7		31 132	17
		3-pole	54	0.75 – 25mm² / AWG 18 – 4	4	20.7		31 133	17
14 x 51	50A / 690V AC, 440V DC	1-pole	27	1.5 – 35mm² / AWG 14 – 2	6	9.8		31 135	17
		3-pole	81	1.5 – 35mm² / AWG 14 – 2	2	30.5		31 138	17
22 x 58	125A / 690V AC, 440V DC	1-pole	36	4 – 50mm² / AWG 10 – 1/0	6	15.9		31 140	17
		3-pole	108	4 – 50mm² / AWG 10 – 1/0	2	48.7		31 143	17
LED indicates blown fuse									

AMBUS® EasySwitch, holder for cyl. fuses, **model with LED 12 – 72V AC / DC**

10 x 38	32A / 12 – 72V AC/DC	1-pole	18	0.75 – 25mm² / AWG 18 – 4	12	6.8		31 930	17
LED indicates blown fuse									

AMBUS® EasySwitch, holder for cyl. fuses, **also available for semiconductor fuses with pilot switch**

Pilot switch indicates if no fuse is inserted, a holder is open or a fuse (with striker) has been tripped.

14 x 51	50A / 690V AC, 440V DC	1-pole	27	1.5 – 35mm² / AWG 14 – 2	6	11.6		31 940	17
		2-pole	54	1.5 – 35mm² / AWG 14 – 2	3	23.5		31 972	17
		3-pole	81	1.5 – 35mm² / AWG 14 – 2	2	34.6		31 941	17
22 x 58	125A / 690V AC, 440V DC	1-pole	36	4 – 50mm² / AWG 10 – 1/0	6	18.1		31 942	17
		2-pole	72	4 – 50mm² / AWG 10 – 1/0	3	36.6		31 957	17
		3-pole	108	4 – 50mm² / AWG 10 – 1/0	2	54.1		31 943	17

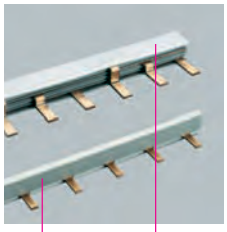
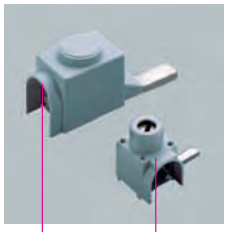

31 014 | 31 012 | 01 198 | 31 028 | 31 267 | 31 939

Accessories

for AMBUS®EasySwitch, holder for cylindrical fuses

Connection sets, for customised combinations of multi-pole units

Type	Pack size	Weight		Part no.	
		kg/100 units			
8 x 31, 2-pole, 10 x 38, 2-pole	1	2.6		31 267	17
8 x 31, 3-pole, 10 x 38, 3-pole	1	3.8		31 268	17
8 x 31, 4-pole, 10 x 38, 4-pole	1	5.0		31 524	17
14 x 51, 2-pole	1	3.6		31 269	17
14 x 51, 3-pole	1	5.8		31 270	17
22 x 58, 2-pole	1	4.6		31 271	17
22 x 58, 3-pole	1	6.8		31 272	17
Each set allows you to create ten 2- or 3-pole combinations.					

Comb-type busbar, insulated, bridge, 1m long

Type	Supply	Supply	Cross section	Pack size	Weight		Part no.	
	centre	side	mm²		kg/100 units			
1-pole, pitch 18mm	130A	80A	16	25	21.8		31 101	06
3-pole, pitch 18mm, 400V	130A	80A	16	10	59.4		31 102	06
1-pole, pitch 27mm	130A	80A	16	25	19.0		31 014	06
3-pole, pitch 27mm, 400V	130A	80A	16	10	56.2		31 012	06
1-pole, pitch 27mm	220A	130A	35	10	50.0		31 057	06
3-pole, pitch 27mm, 400V	220A	130A	35	4	125.0		31 056	06

Connection terminal, for comb-type busbars

Type	Pack size	Weight		Part no.	
		kg/100 units			
for 31 101 and 31 102, side connection up to 25mm²	50	1.2		31 103	07
for 31 101 and 31 102, front connection up to 25mm²	50	1.2		31 157	07
for 31 014, side connection up to 50mm²	25	2.5		31 028	07
for 31 012, side connection up to 50mm²	25	2.9		31 029	07
for 31 012, front connection up to 50mm²	25	2.9		31 085	07
for 31 057, front connection up to 95mm²	3	9.0		01 198	07
for 31 056, front connection up to 95mm²	3	9.3		01 228	07
one terminal required for each phase					

End cap, for comb-type busbars

for 3-pole comb-type busbars 16mm²	50	0.1		31 027	06
for 3-pole comb-type busbars 35mm²	10	0.2		31 084	06

Label, for AMBUS®EasySwitch
not for sizes 8 x 31, part no. 31 273 and 31 274

100 strips with 10 signs each 5mm wide	1000	0.1		31 939	17

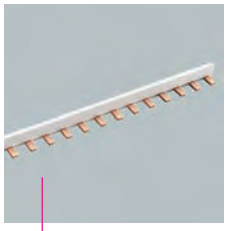

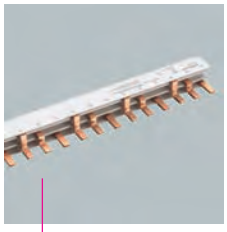

UL-certified products are highlighted in grey

31 548		31 549		31 550	

Accessories

for AMBUS®EasySwitch, holder for cylindrical fuses

Comb-type busbar, 1m long

Type	Supply centre	Supply side	Cross section mm²	Pack size	Weight kg/100 units		Part no.	
1-pole, insulated, bridge, pitch 18mm	200A	100A	25	10	47.5		31 548	06
2-pole, insulated, bridge, pitch 18mm, 690V AC/DC	200A	100A	25	10	81.0		31 561	06
3-pole, insulated, bridge, pitch 18mm, 690V	200A	100A	25	10	113.3		31 549	06

Connection terminal, for comb-type busbar

Type	Connection mm²	Pack size	Weight kg/100 units		Part no.	
for 31 548 and 31 549	35	10	3.5		31 550	07

End cap, for comb-type busbar, 3-pole

for 31 549 and 31 561		20	0.2		31 552	06

UL-certified products are highlighted in grey

31 295		31 296		31 297		31 298	

AMBUS®EasySwitch Class CC

Class CC fuse holder, shock-protected, clip-on mounting
for Class J fuses in compliance with UL 248-4

AMBUS®EasySwitch Class CC, holder for cylindrical Class CC fuses, **standard model**

Rated current / Rated voltage	Type	Width mm	Connection	Pack size	Weight kg/100 units		Part no.	
30A/600V AC	1-pole	18	0.75 – 25mm²/ AWG 18 – 4	12	6.6		31 295	17
	2-pole	36		6	13.1		31 296	17
	3-pole	54		4	19.9		31 297	17

AMBUS®EasySwitch Class CC, holder for cylindrical Class CC fuses, **model with LED 110–600V AC / DC**

30A/600V AC	1-pole	18	0.75 – 25mm²/ AWG 18 – 4	12	6.7		31 298	17
	2-pole	36		6	13.3		31 299	17
	3-pole	54		4	20.2		31 300	17

AMBUS®EasySwitch Class CC, holder for cylindrical Class CC fuses, **model with LED 12–72V AC / DC**

30A / 12–72V AC	1-pole	18	0.75 – 25mm²/ AWG 18 – 4	12	6.7		31 929	17

Accessories

for AMBUS®EasySwitch, holder for cylindrical fuses

Comb-type busbar, insulated, bridge, 1m long

Type	Supply centre	Supply side	Cross section mm²	Pack size	Weight kg/100 units		Part no.	
1-pole, pitch 18mm, 600 V AC/DC	200A	100A	25	10	47.5		31 548	06
2-pole, pitch 18mm, 600 V AC/DC	200A	100A	25	10	81.0		31 561	06
3-pole, pitch 18mm, 600 V AC	200A	100A	25	10	113.3		31 549	06

Connection terminal, for comb-type busbars

Type	Connection mm²	Pack size	Weight kg/100 units		Part no.	
for 31 548 and 31 549	35	10	3.5		31 550	07

End cap, for comb-type busbars, 3-pole

for 31 549		20	0.2		31 552	06

UL-certified products are highlighted in grey

31 284		31 287		33 408		33 409	

AMBUS®J-Carrier / QUADRON®J-Carrier

Class J fuse holder, shock-protected model

for Class J fuses in compliance with UL 248-8

AMBUS®J-Carrier, class J fuse holder, clip-on mounting, **standard model**

Rated current / Rated voltage	Type	Width mm	Connection	Pack size	Weight kg/100 units		Part no.	
30A/600V AC (21 x 57)	1-pole	36	0.75 – 50mm² / AWG 18–1	6	15.8		31 284	16
	2-pole	72	0.75 – 50mm² / AWG 18–1	3	32.2		31 285	16
	3-pole	108	0.75 – 50mm² / AWG 18–1	2	48.6		31 287	16
60A/600V AC (27 x 60)	1-pole	40	2.5 – 50mm² / AWG 14–1	6	18.2		31 920	16
	2-pole	80	2.5 – 50mm² / AWG 14–1	3	37.0		31 921	16
	3-pole	120	2.5 – 50mm² / AWG 14–1	2	55.9		31 922	16

AMBUS®J-Carrier, class J fuse holder, clip-on mounting, **model with LED 110–600V AC/DC**

30A/600V AC (21 x 57)	1-pole	36	0.75 – 50mm² / AWG 18–1	6	15.8		31 932	16
	2-pole	72	0.75 – 50mm² / AWG 18–1	3	32.2		31 933	16
	3-pole	108	0.75 – 50mm² / AWG 18–1	2	48.6		31 934	16
60A/600V AC (27 x 60)	1-pole	40	2.5 – 50mm² / AWG 14–1	6	18.2		31 923	16
	2-pole	80	2.5 – 50mm² / AWG 14–1	3	37.0		31 924	16
	3-pole	120	2.5 – 50mm² / AWG 14–1	2	55.9		31 925	16

QUADRON®CrossLinkCarrier Class J, Class J fuse holder, screw-on

100 A/600 V AC* (29 x 117)	3-pole	106	6.0 – 70mm² / AWG 10–2/0	1	107.0		33 408	16
200 A/600 V AC* (41 x 146)	3-pole	184	35 – 150mm² / AWG 2–MCM300	1	203.0		33 409	16

QUADRON®J-Carrier, Class J fuse holder, screw-on

400A/600V AC (54 x 181)	3-pole	256	16 – 300mm² / AWG4–MCM600	1	672.0		33 308	16

Fuses in the accessories chapter

* Delivery on request.

03 351		03 760		03 289		03 290		79 449	79 448

NH fuse bases

690V AC / 440V DC

NH fuse base size 00, barrier type

Type	Rated current	Size	Poles	Connection mm²	Pack size	Weight kg/100 units		Part no.	
on both sides screw M8	160A	00	1	70	10	12.6		03 350	10
	160A	00	3	70	4	45.7		03 351	10
on both sides clamp	160A	00	1	70	10	13.0		03 354	10
	160A	00	3	70	4	45.5		03 355	10

NH fuse base size 00 – 1 – 2 – 3, shock protection cover type

on both sides screw M8	160A	00	1	70	12	15.2		03 758	10
	160A	00	3	70	4	48.4		03 759	10
on both sides clamp	160A	00	1	70	12	15.5		03 760	10
	160A	00	3	70	4	49.4		03 761	10
srew M8 on one side, clamp 70mm² on other side	160A	00	3	70	4	49.4		03 749	10
on both sides screw M10	250A	1	1	150	3	48.6		03 762	10
	250A	1	3	150	1	158.3		03 763	10
on both sides clamp	250A	1	1	150	3	51.6		03 764	10
	250A	1	3	150	1	161.6		03 765	10
on both sides screw M10	400A	2	1	240	3	93.1		03 766	10
	400A	2	3	240	1	288.3		03 767	10
on both sides screw M12	630A	3	1	240	3	110.8		03 768	10
	630A	3	3	240	1	340.0		03 769	10

NH fuse base, size 1XL, with shock protection for fuse links, size 1XL, 189mm long, up to 1000V AC / 1500V DC

M10 screw on both side	250A	1XL	1	150	3	53.0		03 290	10
incoming connection M10 screw, outgoing connection busbar 30 x 10	250A	1XL	1	150	3	57.0		03 289	10

Grip lug cover, suitable for NH bases with shock protection

Type	Size	Pack size	Weight kg/100 units		Part no.	
1 unit required to cover a fuse	00	30	1.2		79 448	10
2 units required to cover a fuse	1 – 3	30	1.5		79 449	10

Barrier

Type	Pack size	Weight kg/100 units		Part no.	
suitable for NH bases 03 350 / 03 351 / 03 354 / 03 355 / 03 620 / 03 668	100	2.2		03 377	10

Barrier support, for NH fuse base external barrier

suitable for NH bases 03 350 / 03 351 / 03 354 / 03 355	10	0.8		03 359	10

03 620		03 668		03 213		03 193		03 198	

Accessories

for NH fuse bases

Neutral conductor, screw-mounting

Rated current	Connection	Type	Pack size	Weight		Part no.	
				kg/100 units			
160A	70 / 12 x 10mm²	clamp on both sides	10	14.1		03 620	10
160A	70 / 120mm²	screw M8 on both sides	10	14.2		03 519	10
can be attached from the side to 3-pole NH base size 00							

Neutral conductor, disconnectable, for screw-on or clip-on attachment to mounting rail DIN EN 60 715

63A	10mm²	tunnel terminal	50	2.6		05 188	10

Neutral conductor, disconnectable, screw-mounting

160A	70mm²	clamp on both sides	10	19.2		03 668	10
250A	M8	screw on both sides	10	19.5		03 657	10
400A	M10	screw on both sides	3	58.9		03 757	10
630A	M12	screw on both sides	3	58.9		03 213	10

Connecting terminal

Rated current	Connection	Dimensions	Pack size	Weight		Part no.	
				kg/100 units			
160A	clamp on both sides 70mm²	60mm	10	9.1		03 193	10
		125mm	10	14.6		03 173	10
250A	screw M10 on both sides 120mm²	100mm	10	16.8		03 195	10
		200mm	10	30.6		03 196	10
630A	screw M12 on both sides 240mm²	100mm	10	25.6		03 197	10
		200mm	10	42.0		03 198	10

Combination options for NH fuse bases and neutral conductors

Type	Rated current	Fixing	Poles	NH base	Neutral conductor
clamp on both sides	160A	neutral conductor can be attached to the NH base	3-pole + N	03 355	03 620
screw M8 on both sides	160A		3-pole + N	03 351	03 519
further combinations possible by screwing on NH base and neutral conductor separately					

Switch disconnectors and fuse switch disconnectors

Technology

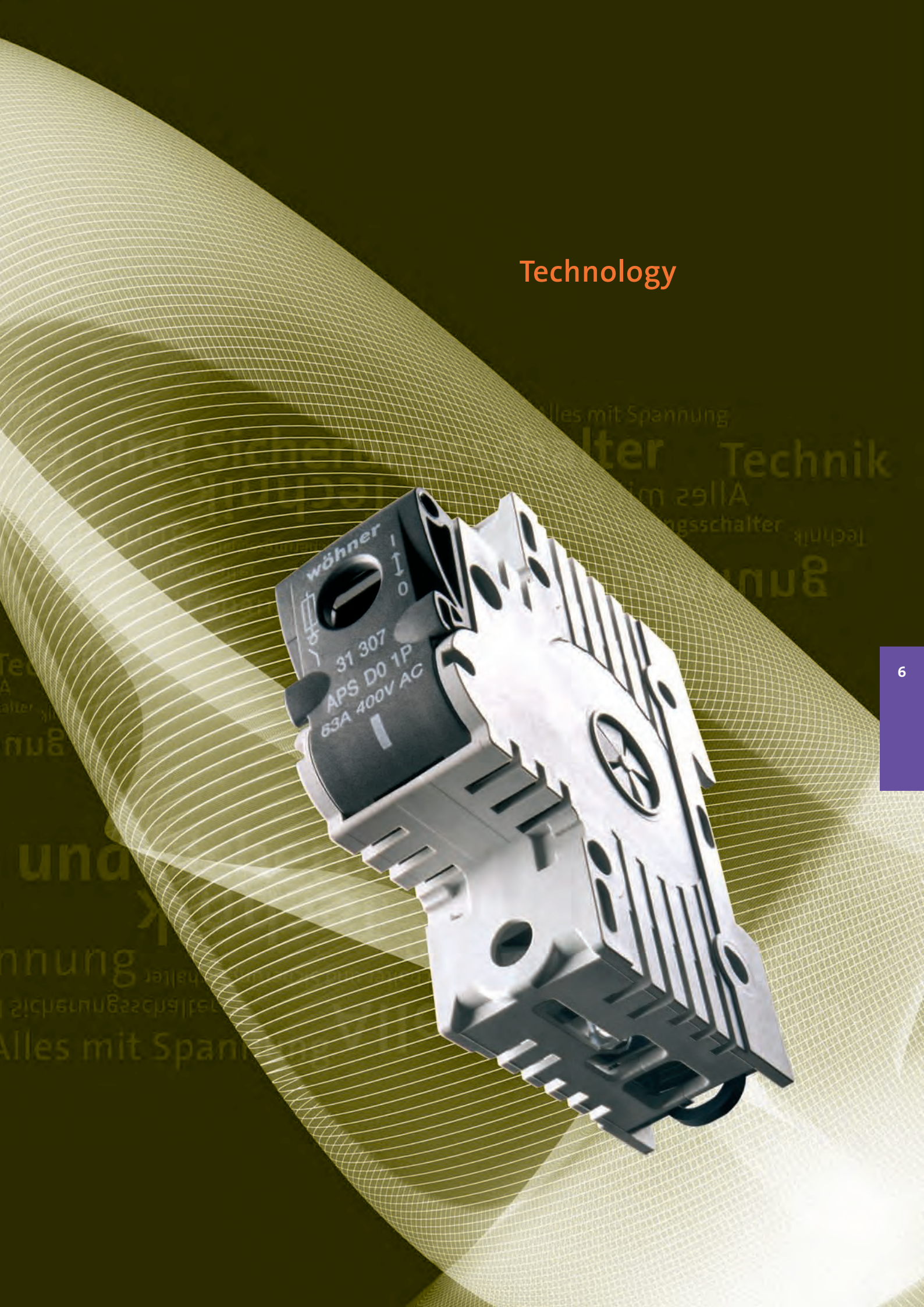

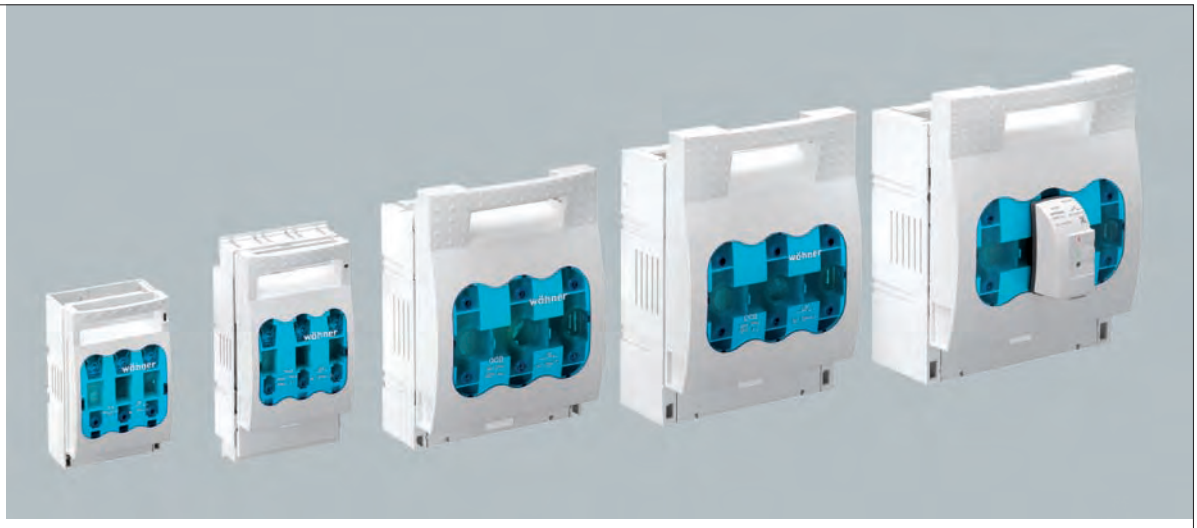

QUADRON®CrossLinkBreaker

Secures and disconnects currents up to 1600A

Sizes 000 to 2 can be mounted quickly on DIN EN 50 022 rails using the fixing set

AMBUS®PowerSwitch

Fuse switch disconnector for D0 fuses

Secure switching and easy to use

Variants for shipbuilding with GL certificate

AMBUS®PowerSwitch

The new D0 fuse switch disconnectors combine the advantages of fuses with a high degree of safety and comfort for the operator. Fuses can only be changed when the power supply is disconnected. The fuse switch disconnector is adjusted to the size of the fuse in the captive fuse carrier using a commercially available gauge ring. No screw cap is required. One comb-type busbar and one conductor or two conductors can be simultaneously connected in the large dual-function terminal up to 35mm². An auxiliary switch for monitoring the switch position can be mounted on the side.

QUADRON®CrossLinkBreaker

Panel-mounting QUADRON®CrossLinkBreaker NH fuse switch disconnectors in sizes 000 to 4a for panel mounting are available for currents up to 1600A. Sizes 000 to 2 are suitable for DIN-rail mounting, sizes 00 to 3 are available in models with electronic and electro-mechanical fuse monitoring. A variety of connection options are available for connecting copper and aluminium conductors.

CAPUS®EasyUse
CAPUS®PowerFuse

Switch disconnector with double-disconnecting contacts provide the operator with maximum security during switching. As emergency stop and main switch from 250A–800A. The models equipped with NH00 to NH3 fuses provide the switching function with additional protection from short circuit and overload. The extensive range of accessories enables copper or aluminium conductors to be connected.

QUADRON®CrossLinkSwitch

Switch disconnector with fuses

Safe, operator-independent switching by means of spring-controlled switch mechanism and double break

Version with door coupling twist handle and shaft extension for operation with closed door

QUADRON®CrossLinkSwitch

Switch disconnector

Safe, operator-independent switching by means of spring-controlled switch mechanism and double break

Version with door coupling twist handle and shaft extension for operation with closed door

QUADRON®CrossLinkSwitch

Switch disconnectors with spring-controlled switch mechanism for frequent switching as per utilisation category "A". With FLAG indicator to display switch position, can be locked in the off position with up to 3 padlocks. Can be used as a mains disconnector as per IEC/EN 60204-1 (main switch function). Can be fitted with an optional pilot switch for monitoring the switch position. Version with rotary drive for operation with a closed door can be combined with door coupling twist handle.

The highest level of safety is provided by the QUADRON® CrossLinkSwitch with NH fuses. The switch prevents accidental switching on when the lid is open – changing the NH fuses is therefore particularly simple and safe. In addition to the rotary drive version there are further types available with fuse monitoring.

Extensive connection accessories complete the product range.

31 307		31 314		31 315	

AMBUS®PowerSwitch

Switch disconnector for D0 fuses up to 63A, dual function terminal on both sides
400V AC / 130V DC for 2-pole type
Shock protection complies with DIN EN 50274 / BGV A3

AMBUS®PowerSwitch, D0 fuse switch disconnector, **standard model,** without sleeve-type gauge ring of the fuse

Type	Rated current	Connection mm²	Pack size	Weight kg/100 units		Part no.	
1-pole	63A	1.5 – 35	3	14.0		**31 307**	03
1-pole + N	63A	1.5 – 35	2	26.2		**31 308**	03
2-pole	63A	1.5 – 35	2	27.8		**31 313**	03
3-pole	63A	1.5 – 35	1	42.0		**31 314**	03
3-pole + N	63A	1.5 – 35	1	54.0		**31 315**	03

AMBUS®PowerSwitch, D0 fuse switch disconnector, **with LED,** without sleeve-type gauge ring of the fuse

1-pole	63A	1.5 – 35	3	14.2		**31 556**	03
3-pole	63A	1.5 – 35	1	42.6		**31 557**	03

Accessories	**7** 9	→
Technical data	**8** 18	→
Dimensions	**9** 28	→

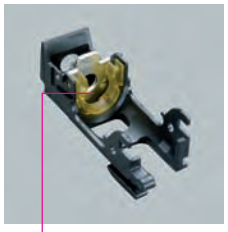

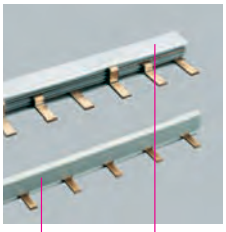

31 902		31 316		31 014	31 012	

Accessories

for AMBUS®PowerSwitch

Reducer

Type	Pack size	Weight kg/100 units		Part no.	
for fuses D01 to 16A and special gauge rings	20	0.1		31 902	01

Pilot switch, for monitoring the switch position, 9mm wide

1 N/O / 1 N/C: 400V AC / 2A; 24V DC / 6A	1	5.4		31 316	03

Comb-type busbar, pitch 27mm, length 1m

Type	Supply centre	Supply side	Cross section mm^2	Pack size	Weight kg/100 units		Part no.	
1-pole, insulated, bridge	130A	80A	16	25	19.0		31 014	06
1-pole, insulated, bridge	220A	130A	35	10	50.0		31 057	06
3-pole, insulated, bridge	130A	80A	16	10	56.2		31 012	06
3-pole, insulated, bridge	220A	130A	35	4	125.0		31 056	06

End cap, for insulated comb-type busbars

for 3-pole comb-type busbars 16mm²	50	0.1		31 027	06
for 3-pole comb-type busbars 35mm²	10	0.2		31 084	06

Connection terminal, for comb-type busbar as bridge version

for 1-pole comb-type busbars 16mm², side connection up to 50mm²	25	2.5		31 028	07
for 3-pole comb-type busbars 16mm², side connection up to 50mm²	25	2.9		31 029	07
for 3-pole comb-type busbars 16mm², front connection up to 50mm²	25	2.9		31 085	07
for 1-pole comb-type busbars 35mm², front connection up to 95mm²	3	9.0		01 198	07
for 3-pole comb-type busbars 35mm², front connection up to 95mm²	3	9.3		01 228	07
a connecting terminal is needed for each phase					

CrossLink® TECHNOLOGY

33 552
33 910
33 545
33 542

QUADRON®CrossLinkSwitch

QUADRON®CrossLinkSwitch, switch disconnector, 3-pole, **with multifunctional handle** (spring-controlled switch mechanism)

Type	Rated current	Width mm	Pack size	Weight kg/100 units		Part no.	
box terminal 70/95mm²	160A	106	1	203.0		33 542	14
connection screw M10*	320A	184	1	539.0		33 552	14

QUADRON®CrossLinkSwitch, switch disconnector, 3-pole, **for door coupling drive** (spring-controlled switch mechanism)

box terminal 70/95mm²	160A	106	1	203.0		33 545	14
connection screw M10*	320A	184	1	516.0		33 555	14
additional extension shaft and door coupling twist handle required							

Accessories

for QUADRON®CrossLinkSwitch

Type	For use with	Pack size	Weight kg/100 units		Part no.	
cover for cable lug, can be clipped on top and bottom	QCS 320A	2	10.7		33 142	09
pilot switch for monitoring the switch position	QCS 160 A, 320A	1	1.3		33 908	14
auxiliary conductor connection	QCS 160	3	0.6		33 915	14
door coupling twist handle, black, IP 66, lockable in neutral position, with up to 3 U-locks, door locking can be activated, without extension shaft**	33 545 33 555	1	46.0		33 910	14
door coupling twist handle, red-yellow, IP 66, lockable in neutral position, with up to 3 U-locks, door locking can be activated, without extension shaft**		1	46.0		33 911	14
extension shaft 290mm long		1	13.0		33 912	14
extension shaft 490mm long		1	22.0		33 913	14
connection terminal 120mm²	QCS 160	3	8.8		33 914	14
box terminal for Cu conductors 35–150mm² s(r), s(s), f, f+AE, fl. Cu	QCS 320	3	10.0		33 909	09
clamp connector for Cu conductors 70–150mm² s(r), f+AE / 18 x 2–14		1	6.3		33 163	09
wedge clamp terminal, single, for Cu and Al* conductors 35 – 150mm² rm, sm, f, f + AE		1	11.6		33 166	09
wedge clamp terminal, double, for Cu conductors, s(r), s(s), f+AE, 2 x 35–70mm²		1	16.6		33 145	09
terminal power rating, see page 8/30						
* not maintenance-free when aluminium conductors are used (see page 8/2)						
** switch can also be installed at a 90° angle to the left/right, with the handle in the same position						

CrossLink® TECHNOLOGY

QUADRON®CrossLinkSwitch

QUADRON®CrossLinkSwitch NH, switch disconnector with fuses, 3-pole,, **with multifunctional handle** (spring-controlled switch mechanism)

Type	Rated current	Size	Width mm	Pack size	Weight kg/100 units		Part no.	
box terminal	125A	00	106	1	208.0		33 502	15
connection screw M10	250A	1	184	1	540.0		33 512	15
fuse monitoring on request								

QUADRON®CrossLinkSwitch NH, switch disconnector, 3-pole, **for door coupling drive** (spring-controlled switch mechanism)

box terminal	125A	00	106	1	201.6		33 505	15
connection screw M10	250A	1	184	1	528.0		33 515	15
additional extension shaft and door coupling twist handle required								

Fuses are not included in delivery.

Accessories

for QUADRON®CrossLinkSwitch

Type	For use with	Pack size	Weight kg/100 units		Part no.	
cover for cable lug, can be clipped on top and bottom	QCS-NH 1	2	10.7		33 142	09
pilot switch for monitoring the switch position	QCS-NH 00, QCS-NH 1	1	1.3		33 908	14
auxiliary conductor connection	QCS-NH 00	3	0.6		33 915	14
door coupling twist handle, black, IP 66, lockable in neutral position, with up to 3 U-locks, door locking can be activated, without extension shaft**	33 505 33 515	1	46.0		33 910	14
door coupling twist handle, red-yellow, IP 66, lockable in neutral position, with up to 3 U-locks, door locking can be activated, without extension shaft**		1	46.0		33 911	14
extension shaft 290mm long		1	13.0		33 912	14
extension shaft 490mm long		1	22.0		33 913	14
connection terminal 120mm²	QCS-NH 00	3	8.8		33 914	14
box terminal for Cu conductors 35–150mm² s(r), s(s), f, f+AE, fl. Cu	QCS-NH 1	3	10.0		33 909	09
clamp connector for Cu conductors 70–150mm² s(r), f+AE / 18 x 2–14		1	6.3		33 163	09
wedge clamp terminal, single, for Cu and Al* conductors 35 – 150mm² rm, sm, f, f+AE		1	11.6		33 166	09
wedge clamp terminal, double, for Cu conductors, s(r), s(s), f+AE, 2 x 35–70mm²		1	16.6		33 145	09

* not maintenance-free when aluminium conductors are used (see page 8/2)

** switch can also be installed at a 90° angle to the left/right, with the handle in the same position

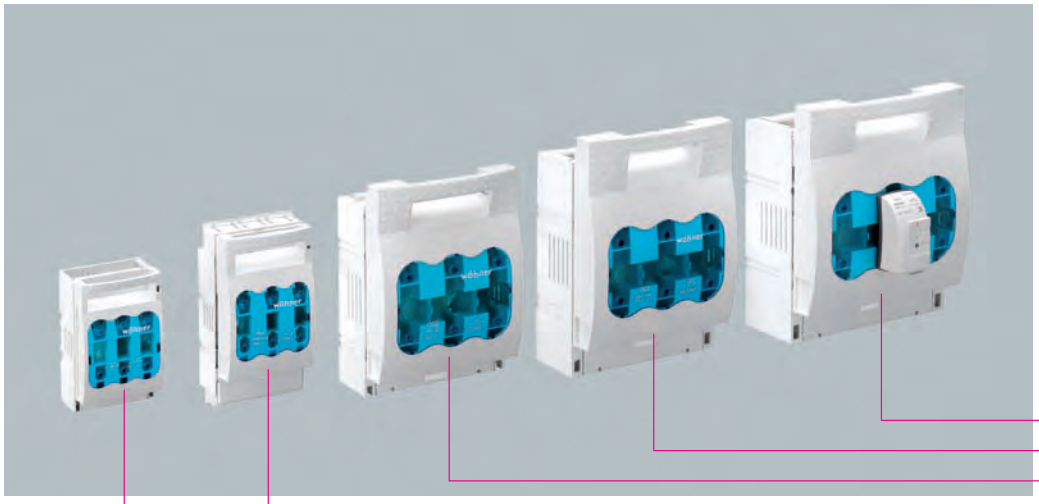

QUADRON® CrossLinkBreaker

NH fuse switch disconnectors for panel mounting

QUADRON® CrossLinkBreaker size 000 to 3, NH fuse switch disconnector

Type	Rated current	Size mm²	Pack size	Weight kg/100 units		Part no.	
box terminal	125A	000	1	57.2		33 217	09
clamp	160A	00	1	78.0		33 199	09
screw M8	160A	00	1	77.7		33 200	09
box terminal	250A	1	1	191.0		33 393	09
screw M10	250A	1	1	171.0		33 201	09
screw M10	400A	2	1	362.0		33 202	09
screw M12	630A	3	1	490.0		33 203	09

QUADRON® VolBreaker size 4a, NH fuse switch disconnector

2 x screw M12	1600A	4 a	1	1534.0		33 204	09

QUADRON® CrossLinkBreaker size 00, NH fuse switch disconnector, short shock protection

clamp 70mm²	160A	00	1	71.6		33 221	09
screw M8	160A	00	1	71.9		33 222	09

QUADRON® CrossLinkBreaker sizes 00 to 3, NH fuse switch disconnector, with electronic fuse monitoring

clamp 70mm²	160A	00	1	93.0		33 328	09
screw M8	160A	00	1	92.0		33 329	09
screw M10	250A	1	1	229.0		33 330	09
screw M10	400A	2	1	380.0		33 331	09
screw M12	630A	3	1	524.0		33 332	09

QUADRON® CrossLinkBreaker sizes 00 to 3, NH fuse switch disconnector, with electromechanical fuse monitoring

clamp 70mm²	160A	00	1	127.0		33 207	09
screw M8	160A	00	1	126.0		33 208	09
screw M10	250A	1	1	255.0		33 149	09
screw M10	400A	2	1	412.0		33 150	09
screw M12	630A	3	1	556.0		33 151	09
circuit diagram for fuse monitoring on page 9/36							

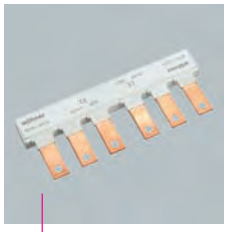

33 376	33 378	33 166	33 145	33 156

Accessories

for QUADRON® CrossLinkBreaker, NH fuse switch disconnectors

Comb-type busbar, insulated, with end caps

Type	Cross section	Can be used	Pack size	Weight		Part no.	
	mm²	with		kg/100 units			
for two NH-LTS	35	33 217	4	23.0		33 906	09
for two NH-LTS	35	33 200	4	27.1		33 376	09
for three NH-LTS	35	33 200	4	44.7		33 377	09
for four NH-LTS	35	33 200	4	62.3		33 392	09

Connection terminal, for comb-type busbar

Type	Connection	Can be used	Pack size	Weight		Part no.	
	mm²	with		kg/100 units			
3-pole comb-type busbars 35mm²	4 – 35	33 217	3	4.0		33 907	09
3-pole comb-type busbars 35mm²	25 – 95	33 200	3	12.1		33 378	09

Connection accessories

clamp connector for Cu conductors, s(r), f + AE, fl. Cu	1.5 – 70 / 12 x 1 – 10	00	3	1.5		03 727	09
	70 – 150 / 18 x 2 – 14	1	1	6.3		33 163	09
	120 – 240 / 21 x 1 – 14	2	1	10.6		33 164	09
	150 – 300 / 25 x 1 – 23	3	1	12.5		33 165	09
M8 screw connector	70	00	3	1.4		30 894	09
wedge clamp terminal, single, for Cu and Al* conductors, s(r), s(s), f + AE	16 – 70	00	3	3.0		33 224	09
box terminal for Cu conductors	70 – 185mm² f, 35 – 150mm² rm, Cu 35 – 120mm² f + AE, la. Cu 15.5 – 24mm wide	1	3	10.0		33 909	09
wedge clamp terminal, single, for Cu and Al* conductors, s(r), s(s), f, f + AE	70 – 150	1	1	11.6		33 166	09
	50 – 150 / 120 – 240	2	1	19.9		33 167	09
	150 – 300	3	1	24.7		33 168	09
wedge clamp terminal, double, for Cu conductors, s(r), s(s), f + AE	2 x 35 – 70	1	1	16.6		33 145	09
	2 x 70 – 120	2	1	27.8		33 146	09
	2 x 150	3	1	36.8		33 147	09
	2 x 185	3	1	36.8		33 385	09
tunnel terminal for screw M8	3 x 1.5 – 16	00	3	6.4		01 182	09

* not maintenance-free when aluminium conductors are used (see page 8/2)

Pilot switch, for monitoring disconnector lid position

1 changeover switch 250V AC / 5A; 30V DC / 4A	000 – 3	1	1.1		33 156	09
1 changeover switch 250V AC / 5A; 30V DC / 4A	1	1	1.3		33 917	09
flat push-on connector DIN 46 244-A, 2.8 x 0.5mm						

Disconnector lid interlock, to seal the disconnector

for sealing wire	000	10	0.1		33 051	09
	00	10	0.2		03 849	09
for 3 padlocks with hasp diameter 4 – 7mm / sealing wire	1 – 3	10	0.5		33 157	09

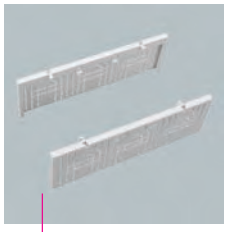

33 142		33 418		33 155		33 154	

Accessories

for QUADRON® CrossLinkBreaker, NH fuse switch disconnectors

Rapid mounting set, for mounting rails DIN EN 50 022 (35 x 7.5mm)

Type	Size	Pack size	Weight kg/100 units.		Part no.	
for 1 mounting rail	000	1	0.6		33 247	09
for 2 mounting rails, with centre distance 125mm or 150mm	00	1	18.5		33 193	09
	1 – 2	1	51.0		33 158	09

Arc chamber

retrofit package for higher utilisation category**	1	3	10.7		33 918	09

Cover, for cable lug, can be clipped on top and bottom

not for 33 221, 33 222, for extra-long cable lug	00	1	2.8		79 811	09
for 33 221, 33 222	00	2	4.8		33 223	09
for all types	1	2	10.7		33 142	09
	2	2	10.9		33 143	09
	3	2	15.6		33 144	09

Cover, for connection area

can be clipped on top or bottom	2	2	4.3		33 418	09
	3 max. 600A	2	5.6		33 419	09

Barrier for handle

to close off handle area from rear	1 – 3	10	2.2		33 155	09

Trim frame, for cover with front plate assembly

Type	W x L	Size	Pack size	Weight kg/100 units		Part no.	
single	130 x 210	000	10	3.1		33 219	09
double	200 x 210	000	10	3.9		33 220	09
single	130 x 210	00	10	1.9		78 893	09
double	232 x 210	00	10	2.9		78 105	09
triple	340 x 210	00	10	3.8		78 139	09
single*	143 x 210	00	10	3.3		33 225	09
double*	232 x 210	00	10	5.6		33 226	09
single with blank*	232 x 210	00	10	6.4		33 227	09
single	215 x 330	1	1	11.7		33 152	09
single	248 x 330	2	1	9.4		33 153	09
single	290 x 330	3	1	13.2		33 154	09

* for 33 221, 33 222

Label

clip, 30 x 10mm	1 – 3	100	0.1		33 159	09

** Delivery date on request

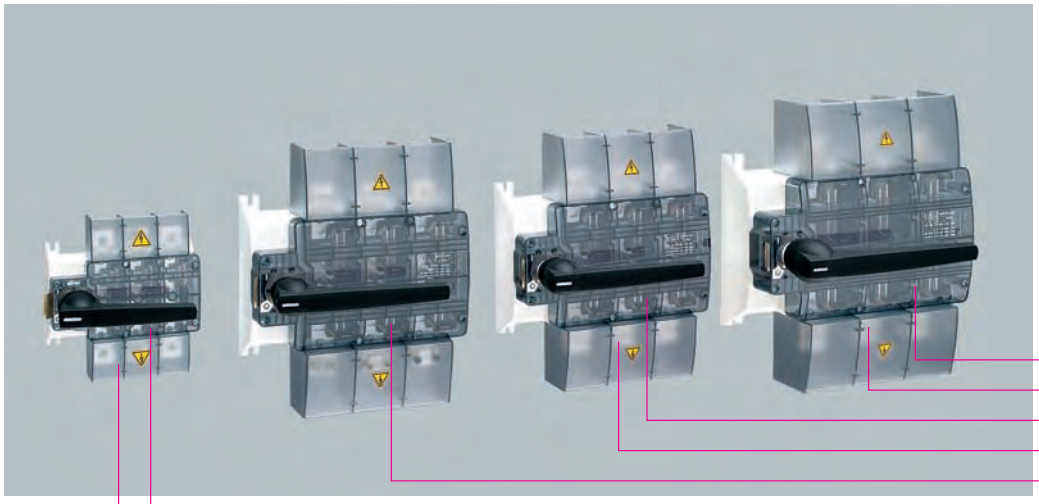

CAPUS® EasyUse

CAPUS® EasyUse, switch disconnectors, 3-pole switching, 500V AC

Type	Rated current	Pack size	Weight kg/100 units		Part no.	
LTS, screw M10, graphite-grey handle	250A	1	194.0		33 333	14
LTS, screw M10, graphite-grey handle	400A	1	538.0		33 334	14
LTS, screw M10, graphite-grey handle	630A	1	546.0		33 335	14
LTS, screw M12, graphite-grey handle	800A	1	944.0		33 336	14
LTS, screw M10, red handle	250A	1	194.0		33 355	14
LTS, screw M10, red handle	400A	1	546.0		33 356	14
LTS, screw M10, red handle	630A	1	544.0		33 357	14
LTS, screw M12, red handle	800A	1	940.0		33 358	14

Accessories

for CAPUS® EasyUse

Terminal cover, attachable on top or bottom

Size	Pack size	Weight kg/100 units		Part no.	
LTS 250, LTS F 160	2	4.0		33 350	14
LTS 400/630, LTS F 250/400	2	12.0		33 351	14
LTS 800, LTS F 630	2	20.0		33 352	14

Pilot switch, for monitoring the switch position

1 NO / 1 NC; 6.3 x 0.8 plug connections	1	2.5		33 347	14

Technical data 8 35,36 →
Dimensions 9 39 →

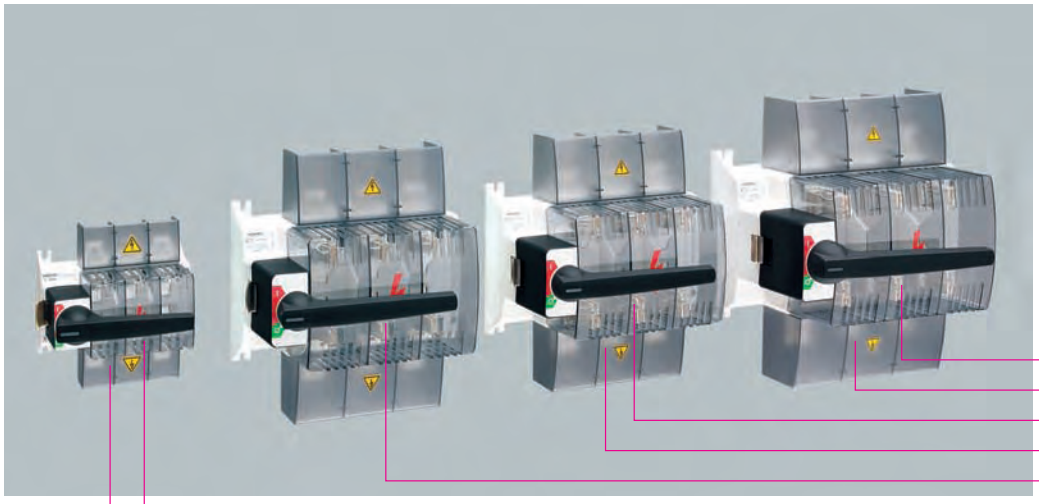

33 340
33 352
33 339
33 351
33 338
33 337
33 350

CAPUS® PowerFuse

CAPUS® PowerFuse, switch disconnector with fuses*, 3-pole switching

Type	Rated current	Size	Pack size	Weight		Part no.	
				kg/100 units			
LTS F, screw M8, graphite-grey handle	160A	00	1	230.0		33 337	15
LTS F, screw M10, graphite-grey handle	250A	1	1	726.0		33 338	15
LTS F, screw M10, graphite-grey handle	400A	2	1	760.0		33 339	15
LTS F, screw M12, graphite-grey handle	630A	3	1	1310.0		33 340	15
LTS F, screw M8, red handle	160A	00	1	230.0		33 359	15
LTS F, screw M10, red handle	250A	1	1	724.0		33 360	15
LTS F, screw M10, red handle	400A	2	1	768.0		33 361	15
LTS F, screw M12, red handle	630A	3	1	1280.0		33 362	15
* Fuses are not included in delivery.							

Accessories

for CAPUS® PowerFuse

Terminal cover, attachable on top or on bottom

Size	Pack size	Weight		Part no.	
		kg/100 units			
LTS 250, LTS F 160	2	4.0		33 350	14
LTS 400/630, LTS F 250/400	2	12.0		33 351	14
LTS 800, LTS F 630	2	20.0		33 352	14

Pilot switch, for monitoring the switch position

1 NO / 1 NC; 6.3 x 0.8 plug connections	1	2.5		33 347	14

33 342		33 346		33 348		33 246	

Accessories

for CAPUS® EasyUse, switch disconnectors, 3-pole switching

for CAPUS® PowerFuse, switch disconnectors, 3-pole switching

Door coupling drive

Type	Size	Pack size	Weight		Part no.	
			kg/100 units			
graphite-grey cover, incl. assembly accessories	LTS 250/400/630 LTS F 160/250/400	1	23.5		33 342	14
	LTS 800 LTS F 630	1	44.0		33 343	14
graphite-grey cover, door interlocked, lockable with padlock, incl. assembly accessories	LTS 250/400/630 LTS F 160/250/400	1	38.0		33 345	14
	LTS 800 LTS F 630	1	67.0		33 346	14
yellow cover, door interlocked, lockable with padlock, incl. assembly accessories	LTS 250/400/630 LTS F 160/250/400	1	38.0		33 348	14
	LTS 800 LTS F 630	1	56.0		33 349	14
extension shaft 300mm long	LTS 250/400/630 LTS F 160/250/400	1	30.0		33 246	14
	LTS 800 LTS F 630	1	57.3		33 283	14
extension shaft 550mm long	LTS 250/400/630 LTS F 160/250/400	1	29.0		33 380	14
	LTS 800 LTS F 630	1	38.0		33 381	14

Technical data 8 35,36 →
Dimensions 9 40 →

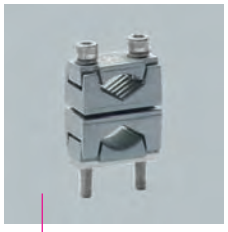

33 371 | 33 365

Accessories

for CAPUS® EasyUse, switch disconnectors, 3-pole switching

for CAPUS® PowerFuse, switch disconnectors, 3-pole switching

Connections accessories

Type	Size	Connection	Pack size	Weight		Part no.	
		mm^2		kg/100 units			
clamp connector for Cu conductors, s(r), f+AE; fl. Cu	LTS F 160	2.5 – 70 / 12 x 10	3	2.9		**33 363**	14
clamp connector for fl. Cu	LTS 250	14 x 9	3	3.5		**33 364**	14
	LTS F 250, LTS 400	18 x 10	1	6.3		**33 163**	09
	LTS F 400, LTS 630	21 x 13	1	10.6		**33 164**	09
	LTS F 630, LTS 800	25 x 13	1	12.5		**33 165**	09
wedge clamp terminal, single, for Cu-Al* conductors, s(r), s(s), f, f+AE	LTS 250	70 – 120	3	6.7		**33 365**	14
	LTS F 250, LTS 400	70 – 150	3	11.6		**33 366**	14
	LTS F 400, LTS 630	120 – 240	3	20.0		**33 367**	14
	LTS F 630, LTS 800	150 – 300	3	25.0		**33 368**	14
wedge clamp terminal, double, for Cu conductors, s(r), s(s), f+AE	LTS F 250, LTS 400	2 x 70 – 120	3	20.4		**33 369**	14
	LTS F 400, LTS 630	2 x 120 – 185	3	34.0		**33 370**	14
	LTS F 630, LTS 800	2 x 150 – 240	3	44.3		**33 371**	14

* not maintenance-free when aluminium conductors are used (see page 8/2)

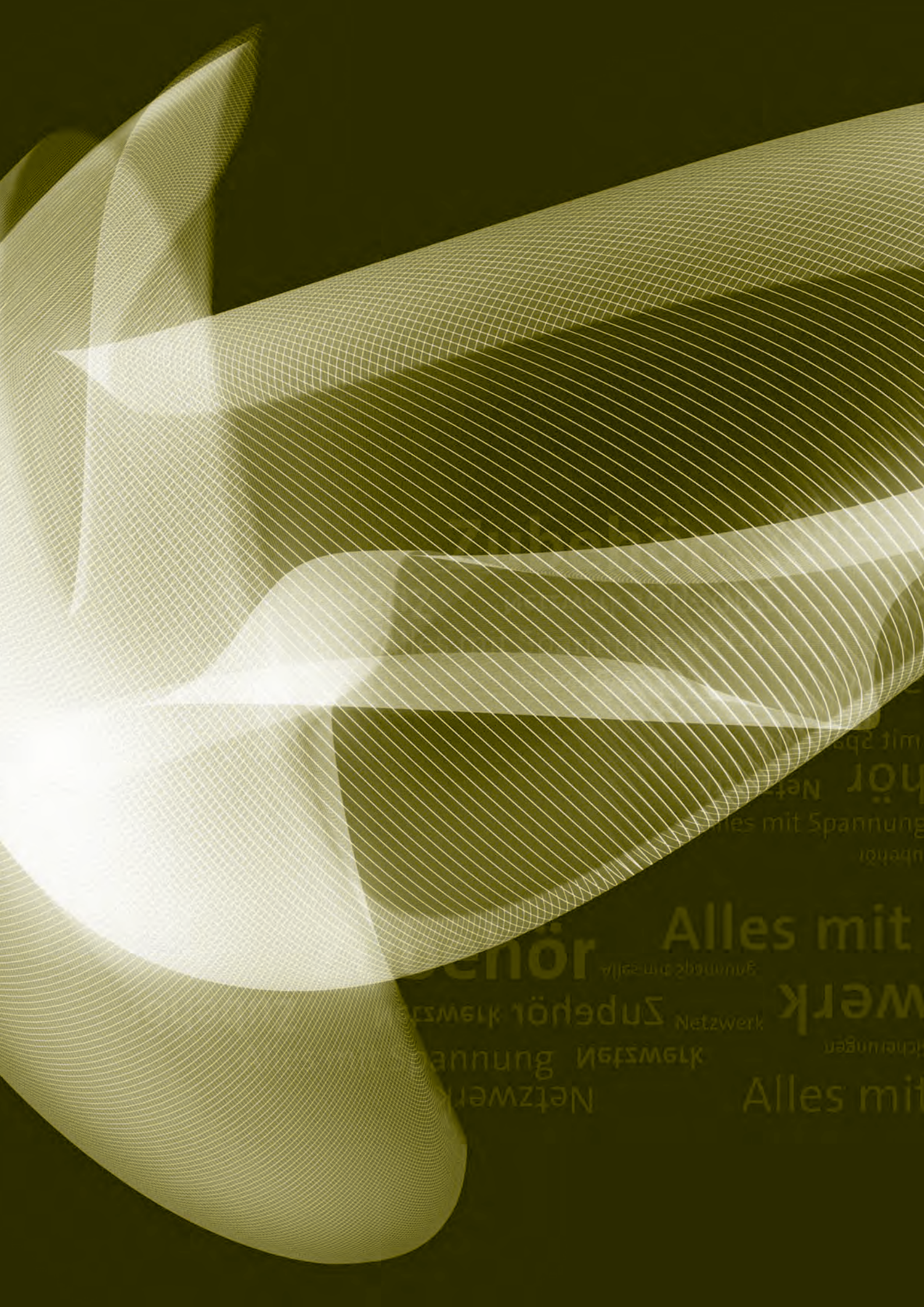
Alles mit
Netzwerk

Accessories

Network

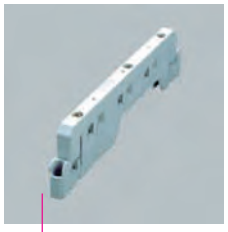

01 138		01 139		01 890		01 888	

Busbar support, 60mm system, 3, 4, 5-pole, for VMS (GE) and AKi (Spelsberg) enclosure range

Busbars	Pack size	Weight		Part no.	
		kg/100 units			
3 x (12, 20, 30 x 10mm) and 2 x (12, 20, 25 x 5, 10mm)	30	16.7		01 138	06

Spacer, for 5mm busbars

for 01 138	100	0.1		01 170	06
3 units required for one busbar support					

Cover frame

for ISO enclosure type VMS	10	16.6		01 139	06

Reserve section cover, for use with cover frame 01 139 only

54mm wide, pitch 3 x 18mm	10	4.5		79 738	06
variable 36 – 64mm with 2 pieces	10	3.2		79 859	06

Connector latch with brace terminal, for connecting equipment

Busbars	For use	Pack size	Weight		Part no.	
	up to max.		kg/100 units			
for flat busbars up to 30 x 20	630A	3	32.3		01 888	07
for Cu and Al* conductors 150 – 300mm², s(r), s(s), f	630A	3	36.6		01 890	07
* not maintenance-free when aluminium conductors are used (see page 8/2)						

05 800		05 783	

Insulator, with female thread

Total height mm	Female thread both sides	Length across flats	Rated voltage kV	Pack size	Weight kg/100 units		Part no.	
20	M 6	17	0.6	100	1.2		05 779	06
30	M 6	30	1.5	20	4.7		05 780	06
30	M 8	30	1.5	20	5.3		05 792	06
35	M 6	32	1.5	20	5.8		05 781	06
35	M 8	32	1.5	20	7.3		05 782	06
40	M 8	40	2.0	20	10.0		05 783	06
40	M 10	40	2.0	20	11.4		05 784	06
40	M 12	40	2.0	20	13.3		05 791	06
45	M 6	46	2.0	20	14.5		05 785	06
45	M 8	46	2.0	20	15.0		05 786	06
45	M 10	46	2.0	20	15.3		05 787	06
50	M 8	36	2.0	20	9.6		05 790	06
50	M 10	50	3.0	20	12.6		05 788	06
60	M 10	40	3.0	20	16.2		05 789	06

Insulator, with stud bolt and female thread

30	M 6	30	1.5	20	5.3		05 800	06
35	M 6	32	1.5	20	6.0		05 801	06
35	M 8	32	1.5	20	8.2		05 802	06

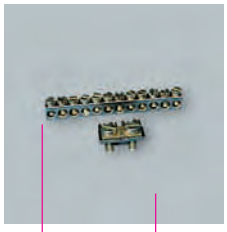

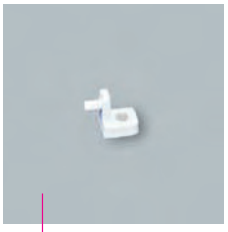

01 127	01 114		01 928		08 824	08 825		01 120		01 119

Earth and neutral busbar, rating 63A, self-locking

Connection mm²	Number of contact positions	Dimensions mm	Pack size	Weight kg/100 units		Part no.	
10	8	9 x 6.5 x 51.5	100	2.2		01 126	06
	12	9 x 6.5 x 77.5	100	3.2		01 127	06
	16	9 x 6.5 x 103.5	100	4.3		01 128	06
	24	9 x 6.5 x 155	50	6.7		01 129	06
	151	9 x 6.5 x 1000	1	43.0		01 130	06
additional dimensions on request							

Connection terminal

35	suitable for earth and neutral busbars 01 126 – 01 130	100	1.4		01 114	07

Earth and neutral busbar, with terminal clamps, rating 63A, self-locking

Number of contact positions incoming 25mm² terminals	outgoing 10mm² terminals	Dimensions mm	Pack size	Weight kg/100 units		Part no.	
without terminal clamp	6	9 x 6.5 x 61.5	100	2.5		01 926	06
1 terminal clamp	12	9 x 6.5 x 124	50	5.5		01 927	06
2 terminal clamps	18	9 x 6.5 x 186.5	60	9.6		01 928	06
3 terminal clamps	24	9 x 6.5 x 249	50	11.5		01 929	06
4 terminal clamps	30	9 x 6.5 x 311.5	50	16.7		01 930	06
5 terminal clamps	36	9 x 6.5 x 374	100	17.6		01 931	06
without clamps	96	9 x 6.5 x 1000	1	48.0		01 932	06

Terminal clamp

Connection	Type	Pack size	Weight kg/100 units		Part no.	
25mm²	suitable for earth and neutral busbar 01 932	100	0.3		08 824	06

Clip-on fastening, for 35mm mounting rail DIN EN 60 715

Type	Pack size	Weight kg/100 units		Part no.	
suitable for earth and neutral busbars 01 126 – 01 129 and 01 926 – 01 932	100	0.2		08 825	06

Terminal support, for earth and neutral busbars

screw mounting	50	1.4		01 120	06
clip-on mounting	50	1.6		01 121	06
screw mounting	50	0.1		01 119	06

Label, for prefabricated earth and neutral busbars 9 x 6.5mm

for 10 contact positions, 15 x 64.5mm	10	0.2		01 333	06

01 144		03 213		03 657		03 668	

Insulated earth and neutral terminal

Rated current	Connection	Type	Pack size	Weight		Part no.	
				kg/100 units			
63A	7 x 10mm²	neutral (blue)	50	2.7		01 143	06
	7 x 10mm²	earth (green / yellow)	50	2.7		01 144	06
for fixing to flat busbars 12 x 2mm							
63A	7 x 10mm²	neutral (blue)	50	2.9		01 257	06
	7 x 10mm²	earth (green / yellow)	50	2.9		01 258	06
clip-on mounting							

Connecting terminal

160A	clamp on both sides 70mm²	60mm	10	9.1		03 193	10
		125mm	10	14.6		03 173	10
250A	screw M10 on both sides 120mm²	100mm	10	16.8		03 195	10
		200mm	10	30.6		03 196	10
630A	screw M12 on both sides 240mm²	100mm	10	25.6		03 197	10
		200mm	10	42.0		03 198	10

Neutral conductor terminal, **disconnectable,** screw-mounting and clip-on

63A	tunnel terminal 10mm²	50mm	50	2.6		05 188	10

Neutral conductor terminal, **disconnectable,** screw-mounting

160A	clamp on both sides 70mm²	120mm	10	19.2		03 668	10
250A	screw M8 on both sides	120mm	10	19.5		03 657	10
400A	screw M10 on both sides	200mm	3	58.9		03 757	10
630A	screw M12 on both sides	200mm	3	58.9		03 213	10

Label, self-adhesive, Ø 15mm

PE (earth)	colour: green-yellow	200	0.1		78 442	06
N (neutral)	colour: blue	200	0.1		78 443	06
PEN (earth-neutral)	colour: green-yellow-blue	200	0.1		78 447	06

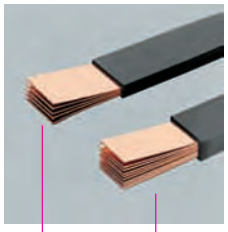
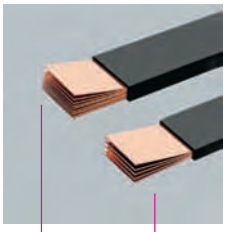

UL-certified products are highlighted in grey

01 196		01 612	01 613		01 615	01 614		01 303	

Flexible copper busbars, **plain,** insulated (105°C), 2m long

Dimensions	Rated current	Cross section	Pack size	Weight*		Part no.	
	50K	mm²		kg/100 units			
3 x 9 x 0.8	162A	21.6	1	38.4		01 054	06
6 x 9 x 0.8	240A	43.2	1	76.9		01 194	06
4 x 13 x 0.5	190A	26	1	46.3		01 322	06
6 x 13 x 0.5	237A	39	1	69.4		01 050	06
10 x 13 x 0.5	316A	65	1	115.7		01 418	06
4 x 15.5 x 0.8	279A	49.6	1	88.3		01 196	06
6 x 15.5 x 0.8	350A	74.4	1	132.4		01 035	06
10 x 15.5 x 0.8	470A	124	1	220.7		01 583	06
3 x 20 x 1	326A	60	1	106.8		01 027	06
6 x 20 x 1	477A	120	1	213.6		01 028	06
10 x 20 x 1	640A	200	1	356.0		01 029	06
4 x 24 x 1	438A	96	1	170.9		01 253	06
5 x 24 x 1	495A	120	1	213.6		01 611	06
6 x 24 x 1	547A	144	1	256.3		01 255	06
8 x 24 x 1	641A	192	1	341.8		01 323	06
10 x 24 x 1	727A	240	1	427.2		01 184	06
5 x 32 x 1	617A	160	1	284.8		01 612	06
10 x 32 x 1	894A	320	1	569.6		01 613	06
5 x 40 x 1	736A	200	1	356.0		01 614	06
6 x 40 x 1	809A	240	1	427.2		01 256	06
10 x 40 x 1	1053A	400	1	712.0		01 615	06
5 x 50 x 1	880A	250	1	445.0		01 060	06
8 x 50 x 1	1114A	400	1	712.0		01 343	06
10 x 50 x 1	1244A	500	1	890.0		01 509	06
5 x 63 x 1	1061A	315	1	560.7		01 324	06
10 x 63 x 1	1481A	630	1	1121.4		01 510	06
10 x 80 x 1	1777A	800	1	1424.0		01 061	06
10 x 100 x 1	2110A	1000	1	1780.0		01 273	06

* The weight specified is the pure copper weight, it does not include the weight of the insulation.

Holder, for laminated busbars

Type	Pack size	Weight		Part no.	
		kg/100 units			
for up to 10mm lamination packs	4	4.5		01 303	06

4 supports and 1 mounting rail EN 60715 are required to fix a 3-pole connection.

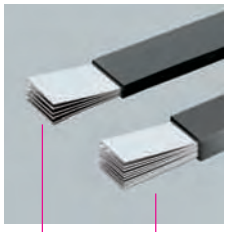
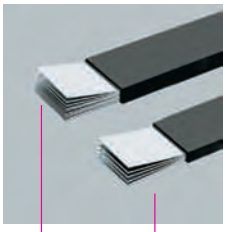

UL-certified products are highlighted in grey

01 089		01 095	01 096		01 099	01 097		01 303	

Flexible copper busbars, **tinned,** insulated (105°C), 2m long

Dimensions	Rated current	Cross section	Pack size	Weight*		Part no.	
	50K	mm²		kg/100 units			
3 x 9 x 0.8	162A	21.6	1	38.4		01 083	06
6 x 9 x 0.8	240A	43.2	1	76.9		01 084	06
6 x 13 x 0.5	237A	39	1	85.4		01 146	06
4 x 15.5 x 0.8	279A	49.6	1	88.3		01 089	06
6 x 15.5 x 0.8	350A	74.4	1	132.4		01 090	06
10 x 15.5 x 0.8	470A	124	1	220.7		01 091	06
3 x 20 x 1	326A	60	1	106.8		01 062	06
6 x 20 x 1	477A	120	1	213.6		01 063	06
10 x 20 x 1	640A	200	1	356.0		01 064	06
5 x 24 x 1	494A	120	1	213.6		01 075	06
10 x 24 x 1	727A	240	1	427.2		01 076	06
5 x 32 x 1	617A	160	1	284.8		01 095	06
10 x 32 x 1	894A	320	1	569.6		01 096	06
5 x 40 x 1	736A	200	1	356.0		01 097	06
10 x 40 x 1	1053A	400	1	712.0		01 099	06
5 x 50 x 1	880A	250	1	500.0		01 112	06
10 x 50 x 1	1244A	500	1	890.0		01 113	06
10 x 63 x 1	1481A	630	1	1121.4		01 123	06

* The weight specified is the pure copper weight, it does not include the weight of the insulation.

Holder, for laminated busbars

Type	Pack size	Weight		Part no.	
		kg/100 units			
for up to 10mm lamination packs	4	4.5		01 303	06

4 supports and 1 mounting rail EN 60715 are required to fix a 3-pole connection.

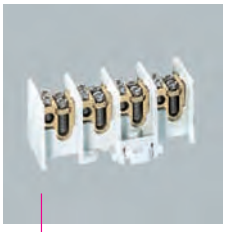

02 606		02 607		02 218		02 225		02 231	

Main branch terminals 25mm²

Type C, rated voltage 690V AC
connections 4 x 25mm², in accordance with DIN VDE 0603-2/03.98
with clip-on mounting for horizontal and vertical assembly

Main branch terminal, shock-protected according to BGV A3

Poles	Type	Pack size	Weight		Part no.	
			kg/100 units			
3	3 inserts each with 4 terminals 25mm²	30	19.6		02 603	08
4	4 inserts each with 4 terminals 25mm²	30	27.1		02 604	08
4	4 inserts each with 4 terminals 25mm², neutral in blue	30	26.7		02 606	08
5	5 inserts each with 4 terminals 25mm²	20	34.0		02 605	08
5	5 inserts each with 4 terminals 25mm², neutral in blue, earth in green-yellow	20	33.7		02 607	08
4	3 inserts each with 4 terminals and 1 insert (N) with 8 terminals 25mm², neutral in blue	20	34.0		02 615	08

Type A, rated voltage 500V AC
Incoming terminal 2 x 25mm², outgoing terminal 16mm², according to DIN VDE 0603-2/03.98
with clip-on mounting for horizontal and vertical assembly

Main branch terminal, outgoing terminals on both sides

1	1 insert with 2 outgoing terminals	25	6.6		02 225	08
1	1 insert with 4 outgoing terminals	25	9.2		02 226	08
1	1 insert with 6 outgoing terminals	10	11.8		02 227	08
2	2 inserts with 2 outgoing terminals	10	12.5		02 228	08
4	4 inserts with 2 outgoing terminals	35	24.7		02 231	08
4	3 inserts with 2 outgoing terminals / 1 insert with 4 outgoing terminals	35	27.1		02 232	08
4	4 inserts with 4 outgoing terminals	5	34.5		02 233	08
4	3 inserts with 2 outgoing terminals / 1 insert with 6 outgoing terminals	35	29.4		02 234	08
4	3 inserts with 4 outgoing terminals / 1 insert with 6 outgoing terminals	5	37.0		02 235	08
4	3 inserts with 4 outgoing terminals / 1 insert with 12 outgoing terminals	5	43.7		02 237	08
5	5 inserts with 2 outgoing terminals	35	31.1		02 238	08

Cover section, for type A terminals

Type	Pack size	Weight		Part no.	
		kg/100 units			
1m long	10	8.4		78 491	08

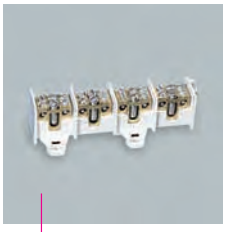

02 242		02 244		02 505		02 619		02 621	

Main branch terminals 35mm²

Rated voltage 500V AC
incoming 2 x 35mm² terminals, according to DIN VDE 0603-2/03.98
with clip-on mounting for horizontal and vertical assembly

Main branch terminal, type A, outgoing 25mm² terminals

Poles	Type	Pack size	Weight		Part no.	
			kg/100 units			
1	1 insert with 2 outgoing terminals	15	9.8		02 242	08
1	1 insert with 4 outgoing terminals	15	13.2		02 243	08
2	2 inserts with 2 outgoing terminals	10	18.8		02 244	08
2	2 inserts with 4 outgoing terminals	10	25.5		02 246	08
4	4 inserts with 2 outgoing terminals	25	39.9		02 505	08
4	3 inserts with 2 outgoing terminals / 1 insert with 6 outgoing terminals	25	51.6		02 544	08
5	5 inserts with 2 outgoing terminals	25	50.3		02 538	08

Main branch terminal, type A, outgoing 35mm² terminals

1	1 insert with 2 outgoing terminals	15	9.4		02 521	08
1	1 insert with 4 outgoing terminals	15	12.9		02 526	08
2	2 inserts with 4 outgoing terminals	10	24.9		02 527	08
4	4 inserts with 2 outgoing terminals	25	39.3		02 517	08
BEWAG version						

Cover section

Type	Pack size	Weight		Part no.	
		kg/100 units			
1m long	10	8.4		78 491	08

Branch terminals, 1-pole

for Cu or Al conductors,
screw-on

Type	Pack size	Weight		Part no.	
		kg/100 units			
incoming connection 2 x 95mm², 2 outgoing connections 50mm²	10	25.0		02 619	08
incoming connection 1 x 240mm², 4 outgoing connections 50mm²	3	32.0		02 621	08

D0 fuses

as per DIN VDE 0636-3 / IEC / EN 60269-3

gL fuse
400V AC, 50kA / 250V DC, 8kA

Size	Type	Pack size		Part no.	
2A	D01	10		01 685	03
4A		10		01 686	03
6A		10		01 687	03
10A		10		01 688	03
16A		10		01 689	03
20A	D02	10		01 690	03
25A		10		01 691	03
35A		10		01 692	03
50A		10		01 693	03
63A		10		01 694	03

Screw cap
400V AC, 250V DC

D01 / E 14	porcelain	20		01 103	03
D01 / E 14	plastic	20		31 005	03
D02 / E 18	porcelain	20		01 104	03
D02 / E 18	plastic	20		31 006	03
D01 / E 18	plastic	20		31 104	03

Retaining cap D0

D01 / E 14	industrial	36		31 909	03
D01 / E 14	utility	36		31 908	03
D02 / E 18	industrial	36		31 910	03
D02 / E 18	utility	36		31 904	03

Special key
for D and D0 retaining cap

D / D0	industrial	1		31 913	03

Gauge ring for E 14

Rated current	Size	Pack size		Part no.	
2A	D01	50		01 715	03
4A		50		01 716	03
6A		50		01 717	03
10A		50		01 718	03

Gauge ring for E 18

2A	D01	50		01 724	03
4A		50		01 725	03
6A		50		01 726	03
10A		50		01 727	03
16A		50		01 728	03
20A	D02	50		01 719	03
25A		50		01 720	03
35A		50		01 721	03
50A		50		01 722	03

Special retaining spring

2 – 16A	D01 / E 18	50		01 729	03

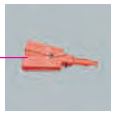

Gauge ring tool

D01, D02, D03		1		01 730	03

D fuses

as per DIN VDE 0636-3 / IEC / EN 60269-3

gL fuses 500V AC/DC, 50kA

Size	Type	Pack size		Part no.	
2A	E 27	5		01 670	04
4A		5		01 671	04
6A		5		01 672	04
10A		5		01 673	04
16A		5		01 674	04
20A		5		01 675	04
25A		5		01 676	04
35A	E 33	5		01 677	04
50A		5		01 678	04
63A		5		01 679	04

Screw cap 500V AC/DC

E 27	porcelain	20		01 098	04
	plastic	20		31 098	04
E 33	porcelain	20		01 100	04
	plastic	20		31 100	04

Retaining cap D

E 27	industrial	20		31 911	04
E 27	utility	20		31 905	04
E 33	industrial	10		31 912	04
E 33	utility	10		31 906	04

Special key for D and D0 retaining cap

D / D0	industrial	1		31 913	03

Screw-in gauge ring

Rated current	Size	Pack size		Part no.	
2A	E 27 / E 33	25		01 741	04
4A		25		01 701	04
6A		25		01 702	04
10A		25		01 703	04
16A		25		01 704	04
20A		25		01 705	04
25A		25		01 706	04
35A	E 33	25		01 707	04
50A		25		01 708	04
63A		25		01 709	04

Screw-in gauge ring tool

Size		Pack size		Part no.	
E 27 / E 33		1		01 998	04

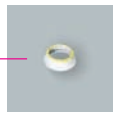

Screw-in gauge ring

Rated current	Size	Pack size		Part no.	
2A	E 27	50		01 541	04
4A		50		01 542	04
6A		50		01 543	04
10A		50		01 544	04
16A		50		01 545	04
20A		50		01 546	04
25A		50		01 547	04
35A	E 33	50		01 548	04
50A		50		01 549	04
63A		50		01 550	04

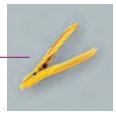

Gauge ring tool

Size		Pack size		Part no.	
E 27 / E 33		1		01 059	04

NH fuses

as per DIN VDE 0636-2 / IEC / EN 60269-2

gG / gL fuses
500V AC, 120kA / 440V DC, 25kA

Rated current	Size	Pack size		Part no.	
2A *	000 (00) (gG)	3		03 521	10
4A *		3		03 522	10
6A		3		03 523	10
10A		3		03 524	10
16A		3		03 525	10
20A		3		03 526	10
25A		3		03 527	10
35A		3		03 528	10
50A		3		03 529	10
63A		3		03 530	10
80A *		3		03 531	10
100A *		3		03 532	10
125A **		3		03 243	10
125A *	00 (gG)	3		03 533	10
160A *		3		03 534	10

* 250V DC, 42kA
** 400V AC, no DC values

Knife link

160A	00	3		03 161	10
250A	1	3		03 162	10
400A	2	3		03 163	10
630A	3	3		03 164	10
1600A	4a	3		03 185	10

gG / gL fuses
500VAC, 120kA / 440VDC, 25kA

Rated current	Size	Pack size		Part no.	
16A *	1 (gG)	3		03 549	10
20A *		3		03 550	10
25A		3		03 551	10
35A		3		03 552	10
50A		3		03 553	10
63A		3		03 554	10
80A		3		03 555	10
100A		3		03 556	10
125A		3		03 557	10
160A		3		03 558	10
200A		3		03 559	10
224A		3		03 560	10
250A		3		03 561	10
35A *	2 (gG)	3		03 562	10
50A		3		03 563	10
63A		3		03 564	10
80A		3		03 565	10
100A		3		03 566	10
125A		3		03 567	10
160A		3		03 568	10
200A		3		03 569	10
224A		3		03 570	10
250A		3		03 571	10
300A		3		03 572	10
315A		3		03 573	10
355A *		3		03 574	10
400A *		3		03 575	10
315A *	3 (gG)	3		03 577	10
400A *		3		03 579	10
500A *		3		03 581	10
630A *		3		03 582	10
800A	4a (gG)	1		03 181	10
1000A		1		03 182	10
1250A		1		03 183	10
1600A		1		03 184	10

* 250V DC, 42kA

NH fuses

as per DIN VDE 0636-2 / IEC / EN 60269-2

gG / gL fuses
690 V AC, 120kA / 250 V DC, 42kA

Rated current	Size	Pack size		Part no.	
6A *	000 (gG)	3		03 908	10
10A *		3		03 909	10
16A *		3		03 910	10
20A *		3		03 911	10
25A *		3		03 912	10
32A *		3		03 913	10
35A *	00 (gG)	3		03 914	10
40A *		3		03 915	10
50A *		3		03 916	10
63A *		3		03 917	10
80A *		3		03 918	10
100A *		3		03 919	10
25A	1 (gG)	3		03 920	10
35A		3		03 922	10
63A		3		03 925	10
100A		3		03 927	10
125A		3		03 928	10
160A		3		03 929	10
200A		3		03 930	10
250A **		3		03 924	10
100A	2 (gG)	3		03 938	10
200A		3		03 941	10
250A		3		03 942	10
315A		3		03 943	10
315A	3 (gG)	3		03 945	10
355A		3		03 949	10
400A		3		03 946	10
500A *		3		03 947	10

* 690V AC, 100kA
** 690V AC, 50kA

NH universal slip-on handle

Size		Pack size		Part no.	
000 to 3	open	1		03 502	10

31 185

gG cylindrical fuses

gG (gL) fuses
complies with IEC 60269-2

Size	Rated current	Rated voltage	Rated short circuit breaking capacity	Power output	Pack size	Weight kg/100 units		Part no.	
8 x 31 (gG)	4A	400V AC	20kA		10	0.1		31 177	17
	6A	400V AC	20kA		10	0.1		31 178	17
	10A	400V AC	20kA		10	0.1		31 179	17
	16A	400V AC	20kA		10	0.1		31 180	17
	20A	400V AC	20kA		10	0.1		31 181	17
10 x 38 (gG)	1A	500V AC	120kA	0.5W	10	0.6		31 008	17
	2A	500V AC	120kA	0.6W	10	0.6		31 182	17
	4A	500V AC	120kA	0.7W	10	0.6		31 183	17
	6A	500V AC	120kA	0.8W	10	0.6		31 184	17
	8A	500V AC	120kA	0.9W	10	0.6		31 009	17
	10A	500V AC	120kA	1.0W	10	0.6		31 185	17
	12A	500V AC	120kA	1.3W	10	0.6		31 010	17
	16A	500V AC	120kA	1.6W	10	0.6		31 186	17
	20A	500V AC	120kA	2.0W	10	0.6		31 187	17
	25A	500V AC	120kA	2.6W	10	0.6		31 188	17
	32A	400V AC	120kA	2.9W	10	0.6		31 189	17
14 x 51 (gG)	2A	690V AC	80kA	0.8W	10	1.9		31 011	17
	6A	690V AC	80kA	1.0W	10	1.9		31 017	17
	10A	690V AC	80kA	1.3W	10	1.9		31 190	17
	16A	690V AC	80kA	2.0W	10	1.9		31 191	17
	20A	690V AC	80kA	2.5W	10	1.9		31 192	17
	25A	690V AC	80kA	3.3W	10	1.9		31 193	17
	32A	500V AC	80kA	3.5W	10	1.9		31 194	17
	40A	500V AC	120kA	4.8W	10	1.9		31 195	17
	50A	400V AC	120kA	4.9W	10	1.9		31 196	17
22 x 58 (gG)	16A	690V AC	80kA	2.3W	10	5.0		31 018	17
	20A	690V AC	80kA	2.8W	10	5.0		31 019	17
	25A	690V AC	80kA	3.6W	10	5.0		31 197	17
	32A	690V AC	80kA	3.7W	10	5.0		31 198	17
	40A	690V AC	80kA	4.5W	10	5.0		31 199	17
	50A	690V AC	80kA	5.2W	10	5.0		31 200	17
	63A	500V AC	80kA	6.9W	10	5.0		31 201	17
	80A	500V AC	120kA	7.8W	10	5.0		31 202	17
	100A	500V AC	120kA	8.6W	10	5.0		31 203	17
	125A	400V AC	120kA	11.4W	10	5.0		31 204	17

31 366

gG cylindrical fuses

gG (gL) fuses, with striker complies with IEC 60269-2

Size	Rated current	Rated voltage	Rated short circuit breaking capacity	Power output	Pack size	Weight kg/100 units		Part no.	
14 x 51 (gG)	2A	500V AC	80kA	0.9W	10	2.0		31 393	17
	4A	500V AC	80kA	1.0W	10	2.0		31 365	17
	6A	500V AC	80kA	1.1W	10	2.0		31 366	17
	8A	500V AC	80kA	1.2W	10	2.0		31 367	17
	10A	500V AC	80kA	1.3W	10	2.0		31 368	17
	12A	500V AC	80kA	1.7W	10	2.0		31 369	17
	16A	500V AC	80kA	2.0W	10	2.0		31 370	17
	20A	500V AC	80kA	2.5W	10	2.0		31 371	17
	25A	500V AC	80kA	3.3W	10	2.0		31 372	17
	32A	500V AC	120kA	3.5W	10	2.0		31 373	17
	40A	500V AC	120kA	4.8W	10	2.0		31 374	17
	50A	400V AC	120kA	4.9W	10	2.0		31 375	17
22 x 58 (gG)	6A	690V AC	80kA	1.2W	10	5.2		31 376	17
	8A	690V AC	80kA	1.3W	10	5.2		31 377	17
	10A	690V AC	80kA	1.4W	10	5.2		31 378	17
	12A	690V AC	80kA	1.8W	10	5.2		31 379	17
	16A	690V AC	80kA	2.1W	10	5.2		31 380	17
	20A	690V AC	80kA	2.7W	10	5.2		31 381	17
	25A	690V AC	80kA	3.6W	10	5.2		31 382	17
	32A	690V AC	80kA	3.7W	10	5.2		31 383	17
	40A	690V AC	80kA	4.5W	10	5.2		31 384	17
	50A	690V AC	80kA	5.2W	10	5.2		31 385	17
	63A	500 V AC	80kA	6.9W	10	5.2		31 386	17
	80A	500V AC	80kA	7.8W	10	5.2		31 387	17
	100A	500V AC	120kA	8.6W	10	5.2		31 388	17
	125A	400V AC	120kA	11.4W	10	5.2		31 389	17

UL-certified products are highlighted in grey

31 209

gR cylindrical fuses

gR fuses
complies with IEC/EN 60269-4

Size	Rated current	Rated voltage	Rated short circuit breaking capacity	Power output	Pack size	Weight kg/100 units		Part no.	
10 x 38 (gR)	1A	660V AC	200kA	0.9W	10	0.6		31 205	17
	2A	660V AC	200kA	1.0W	10	0.6		31 206	17
	4A	660V AC	200kA	1.1W	10	0.6		31 207	17
	6A	660V AC	200kA	1.6W	10	0.6		31 208	17
	10A	660V AC	200kA	2.1W	10	0.6		31 209	17
	12A	660V AC	200kA	3.1W	10	0.6		31 210	17
	16A	660V AC	200kA	4.4W	10	0.6		31 211	17
	20A	660V AC	200kA	5.8W	10	0.6		31 212	17
	25A	660V AC	200kA	6.8W	10	0.6		31 213	17
	30A	660V AC	200kA	8.2W	10	0.6		31 214	17
14 x 51 (gR)	10A	690V AC	200kA	2.6W	10	1.9		31 215	17
	16A	690V AC	200kA	4.7W	10	1.9		31 216	17
	20A	690V AC	200kA	6.0W	10	1.9		31 217	17
	25A	690V AC	200kA	7.6W	10	1.9		31 218	17
	32A	690V AC	200kA	9.5W	10	1.9		31 219	17
	40A	690V AC	200kA	10.0W	10	1.9		31 220	17
	50A	690V AC	200kA	12.0W	10	1.9		31 221	17
22 x 58 (gR)	20A	690V AC	200kA	6.0W	10	5.0		31 222	17
	25A	690V AC	200kA	7.2W	10	5.0		31 223	17
	32A	690V AC	200kA	9.6W	10	5.0		31 224	17
	40A	690V AC	200kA	12.0W	10	5.0		31 225	17
	50A	690V AC	200kA	15.0W	10	5.0		31 226	17
	63A	690V AC	200kA	16.0W	10	5.0		31 227	17
	80A	690V AC	200kA	18.0W	10	5.0		31 228	17
	100A	690V AC	200kA	19.0W	10	5.0		31 229	17

Designation for UL 508A

31 544 | 31 558

gPV cylindrical fuses

Use of gPV fuses, as per IEC/EN 60269-6
for photovoltaic applications

Size	Rated current	Rated voltage	Rated short circuit breaking capacity	Power output	Pack size	Weight kg/100 units		Part no.	
10 x 38 (gPV)	10A	1000V DC	30kA / 1000V DC	1.5W	10	0.6		31 544	17
	12A	1000V DC	30kA / 1000V DC	1.6W	10	0.6		31 545	17
	16A	1000V DC	30kA / 1000V DC	2.1W	10	0.6		31 546	17
	20A	1000V DC	30kA / 1000V DC	2.5W	10	0.6		31 547	17
14 x 85 (gPV)	16A	1100V DC	30kA / 1100V DC	3.8W	10	2.7		31 560	17
	20A	1100V DC	30kA / 1100V DC	4.7W	10	2.7		31 559	17
	25A	1000V DC	30kA / 1000V DC	5.9W	10	2.7		31 558	17
delivery date on request									

UL-certified products are highlighted in grey

31 252

Class CC cylindrical fuses

Class CC fuse time delay complies with UL 248-4

Size	Rated current	Rated voltage	Rated short circuit breaking capacity		Pack size	Weight kg/100 units		Part no.	
Class CC (10 x 38) time delay	0.5A	600V AC	200kA		10	0.8		31 394	17
	1.0A	600V AC	200kA		10	0.8		31 244	17
	1.5A	600V AC	200kA		10	0.8		31 395	17
	2.0A	600V AC	200kA		10	0.8		31 245	17
	2.5A	600V AC	200kA		10	0.8		31 396	17
	3.0A	600V AC	200kA		10	0.8		31 397	17
	4.0A	600V AC	200kA		10	0.8		31 246	17
	5.0A	600V AC	200kA		10	0.8		31 398	17
	6.0A	600V AC	200kA		10	0.8		31 247	17
	8.0A	600V AC	200kA		10	0.8		31 399	17
	10.0A	600V AC	200kA		10	0.8		31 248	17
	12.0A	600V AC	200kA		10	0.8		31 400	17
	15.0A	600V AC	200kA		10	0.8		31 249	17
	20.0A	600V AC	200kA		10	0.8		31 250	17
	25.0A	600V AC	200kA		10	0.8		31 251	17
	30.0A	600V AC	200kA		10	0.8		31 252	17

UL-certified products are highlighted in grey

31 241

Class CC cylindrical fuses

Class CC fuse
fast acting
complies with UL 248-4

Size	Rated current	Rated voltage	Rated short circuit breaking capacity		Pack size	Weight kg/100 units		Part no.	
Class CC (10 x 38) fast acting	0.5A	600V AC	200kA		10	0.8		31 401	17
	1.0A	600V AC	200kA		10	0.8		31 235	17
	1.5A	600V AC	200kA		10	0.8		31 402	17
	2.0A	600V AC	200kA		10	0.8		31 236	17
	2.5A	600V AC	200kA		10	0.8		31 403	17
	3.0A	600V AC	200kA		10	0.8		31 404	17
	4.0A	600V AC	200kA		10	0.8		31 237	17
	5.0A	600V AC	200kA		10	0.8		31 405	17
	6.0A	600V AC	200kA		10	0.8		31 238	17
	8.0A	600V AC	200kA		10	0.8		31 406	17
	10.0A	600V AC	200kA		10	0.8		31 239	17
	12.0A	600V AC	200kA		10	0.8		31 407	17
	15.0A	600V AC	200kA		10	0.8		31 240	17
	20.0A	600V AC	200kA		10	0.8		31 241	17
	25.0A	600V AC	200kA		10	0.8		31 242	17
	30.0A	600V AC	200kA		10	0.8		31 243	17

UL-certified products are highlighted in grey

31 353		31 363		03 231		03 236	

Class J cylindrical fuses

Class J fuse time delay complies with UL 248-8

Size	Rated current	Rated voltage	Rated short circuit breaking capacity		Pack size	Weight kg/100 units		Part no.	
Class J (21 x 57) time delay	1A	600V AC	200kA		10	4.4		31 333	16
	2A	600V AC	200kA		10	4.4		31 338	16
	3A	600V AC	200kA		10	4.4		31 342	16
	4A	600V AC	200kA		10	4.4		31 345	16
	5A	600V AC	200kA		10	4.4		31 347	16
	6A	600V AC	200kA		10	4.4		31 349	16
	8A	600V AC	200kA		10	4.4		31 351	16
	9A	600V AC	200kA		10	4.4		31 352	16
	10A	600V AC	200kA		10	4.4		31 353	16
	12A	600V AC	200kA		10	4.4		31 354	16
	15A	600V AC	200kA		10	4.4		31 355	16
	20A	600V AC	200kA		10	4.4		31 357	16
	25A	600V AC	200kA		10	4.4		31 358	16
	30A	600V AC	200kA		10	4.4		31 359	16
Class J (27 x 60) time delay	35A	600V AC	200kA		10	7.6		31 360	16
	40A	600V AC	200kA		10	7.6		31 361	16
	45A	600V AC	200kA		10	7.6		31 362	16
	50A	600V AC	200kA		10	7.6		31 363	16
	60A	600V AC	200kA		10	7.6		31 364	16
Class J (29 x 117) time delay	70A	600V AC	200kA		1	15.4		03 228	16
	80A	600V AC	200kA		1	15.4		03 229	16
	90A	600V AC	200kA		1	15.4		03 230	16
	100A	600V AC	200kA		1	15.4		03 231	16
Class J (41 x 146) time delay	110A	600V AC	200kA		1	38.2		03 232	16
	125A	600V AC	200kA		1	38.2		03 233	16
	150A	600V AC	200kA		1	38.2		03 234	16
	175A	600V AC	200kA		1	38.2		03 235	16
	200A	600V AC	200kA		1	38.2		03 236	16
Class J (54 x 181) time delay	225A	600V AC	200kA		1	76.0		03 237	16
	250A	600V AC	200kA		1	76.0		03 238	16
	300A	600V AC	200kA		1	76.0		03 239	16
	350A	600V AC	200kA		1	76.0		03 240	16
	400A	600V AC	200kA		1	76.0		03 241	16

UL-certified products are highlighted in grey

31 323		31 514		03 215		03 220	

Class J cylindrical fuses

Class J fuse
fast acting
complies with UL 248-8

Size	Rated current	Rated voltage	Rated short circuit breaking capacity		Pack size	Weight kg/100 units		Part no.	
Class J (21 x 57) fast acting	1A	600V AC	200kA		10	4.4		31 320	16
	2A	600V AC	200kA		10	4.4		31 328	16
	3A	600V AC	200kA		10	4.4		31 321	16
	4A	600V AC	200kA		10	4.4		31 329	16
	5A	600V AC	200kA		10	4.4		31 330	16
	6A	600V AC	200kA		10	4.4		31 322	16
	8A	600V AC	200kA		10	4.4		31 331	16
	10A	600V AC	200kA		10	4.4		31 323	16
	12A	600V AC	200kA		10	4.4		31 332	16
	15A	600V AC	200kA		10	4.4		31 324	16
	20A	600V AC	200kA		10	4.4		31 325	16
	25A	600V AC	200kA		10	4.4		31 326	16
	30A	600V AC	200kA		10	4.4		31 327	16
Class J (27 x 60) fast acting	35A	600V AC	200kA		10	7.6		31 511	16
	40A	600V AC	200kA		10	7.6		31 512	16
	45A	600V AC	200kA		10	7.6		31 513	16
	50A	600V AC	200kA		10	7.6		31 514	16
	60A	600V AC	200kA		10	7.6		31 515	16
Class J (29 x 117) fast acting	70A	600V AC	200kA		1	15.4		03 214	16
	80A	600V AC	200kA		1	15.4		03 215	16
	90A	600V AC	200kA		1	15.4		03 216	16
	100A	600V AC	200kA		1	15.4		03 217	16
Class J (41 x 146) fast acting	110A	600V AC	200kA		1	38.2		03 218	16
	125A	600V AC	200kA		1	38.2		03 219	16
	150A	600V AC	200kA		1	38.2		03 220	16
	175A	600V AC	200kA		1	38.2		03 221	16
	200A	600V AC	200kA		1	38.2		03 222	16
Class J (54 x 181) fast acting	225A	600V AC	200kA		1	76.0		03 223	16
	250A	600V AC	200kA		1	76.0		03 224	16
	300A	600V AC	200kA		1	76.0		03 225	16
	350A	600V AC	200kA		1	76.0		03 226	16
	400A	600V AC	200kA		1	76.0		03 227	16

Alles mit Spannung
Technische Daten
Forschung

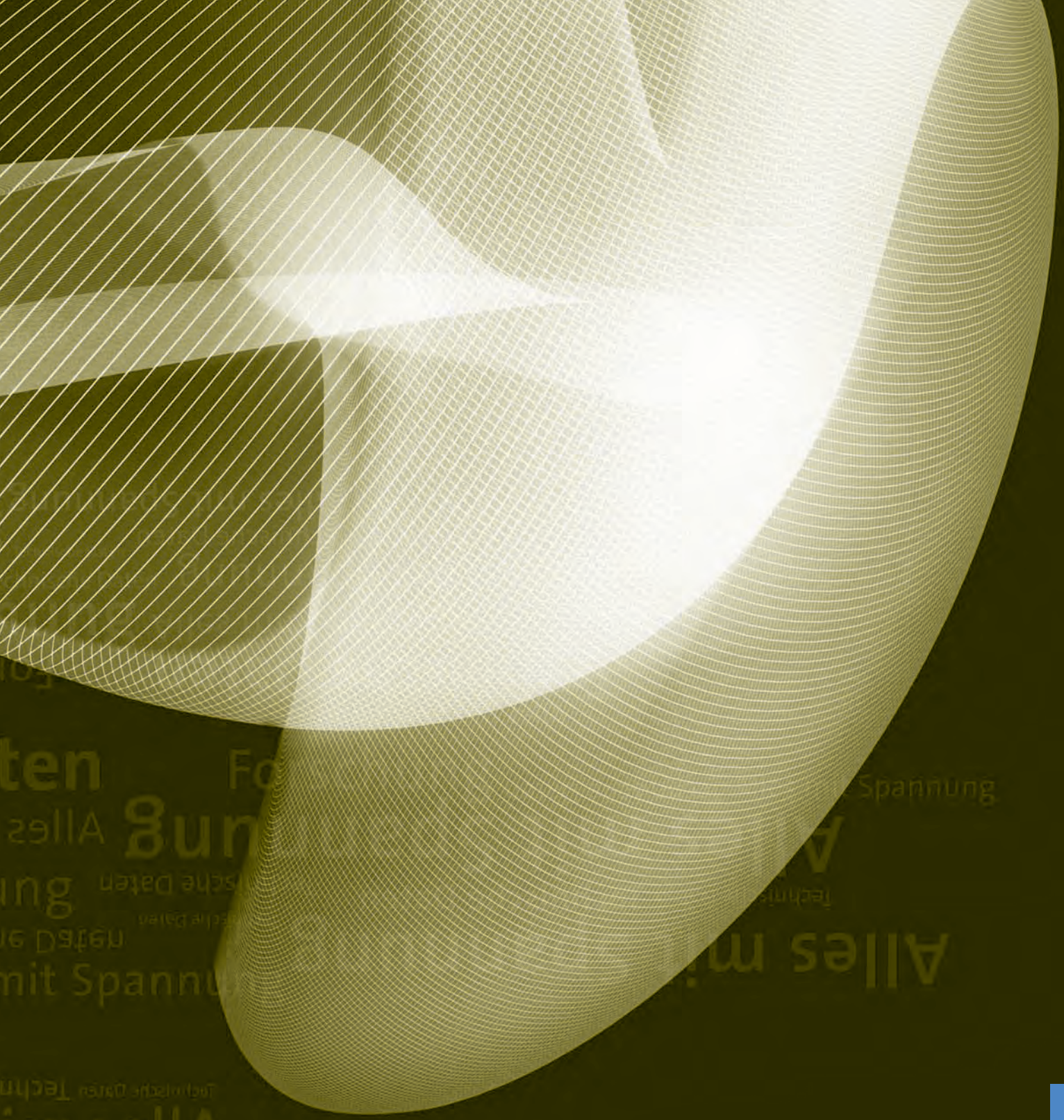

Technical data

Research

General notes

Wöhner busbar systems and components are the result of expert development based on many years of experience. They have been exhaustively tested and hold many approvals. The correct selection of busbars and components is the responsibility of a system's planner.
To avoid hazards to people and materials which can arise when working with electricity, these systems and components should only be used by suitably trained personnel, and relevant regulations must be observed.

In particular, installation, maintenance, modifications and additions must only be carried out by qualified personnel in accordance with the general construction and safety regulations applicable to high-current electrical systems. Modern technological developments and the way in which the components of the system interact must be taken into account. It is essential that all accessible parts are electrically isolated during installation and maintenance.

All connections must be correctly tightened with the specified torque (Md), correct gauges must be used and components that provide protection against accidental contact with live parts must be fitted. After transportation, all connections must be checked and, if necessary, re-tightened.

Products are to be used and operated correctly in the manner intended.

The technical information contained in the product manual and the installation instructions should be observed and retained for future modifications, maintenance or additions to the installation. Wöhner reserves the right to make modifications to its components, as the result of developments and technical advances.

Detailed technical information is available on the internet at: **www.woehner.com**

Operating conditions

The information contained in this document, unless specifically stated to the contrary, is valid for the recommended mounting position and the indoor ambient conditions (level of soiling 3, in exceptional cases 2) defined in IEC 60439-1 or IEC 61439-1/2. The user must inform the manufacturer of any particular operating conditions that deviate from this standard.

Plant-specific reduction factors should be taken into account in accordance with the exact conditions of use. The stated maximum values apply for each product in combination with other optimised components. Observe all temperature specifications for the plastics in use. The material properties described refer, in part, to multiple products. In isolated cases, values may exceed the levels specified. Further information at www.woehner.com.

We recommend vertically mounting the device on a horizontal busbar system. The fixing handle must be placed on top for switchgears mounted vertically. The rated load factor according to Table 1 or Table 101 applies for this mounting position, components with permissible power dissipation in the worst case and the ambient conditions in accordance with IEC 60439-1, section 6.1.1.1 or IEC 61439-2, section 7.1.1.1.

Number of main circuits	Rated load factor
2 and 3	0.9
4 and 5	0.8
6 to 9 inclusive	0.7
10 and more	0.6

In case of deviating mounting positions and conditions, all influencing factors are on maximum temperature such as:
- Power output per fuse and the device in operation,
- Simultaneous full and partial load cycles,
- Alignment in the system, devices affecting each other,
- Busbar cross-section, conductor cross-section,
- Ambient temperature, current conditions, require the observation of additional correction factors

by additional correction factors.

Mounting positions are prohibited where gravity and the contact direction of motion are opposed.

Air and creepage distances must be calculated in compliance with EN 60664-1 (VDE 0110 part 1). For values of 12mm and greater, these requirements are automatically satisfied up to 690V AC in compliance with IEC. Additional specifications, such as the minimum distance to earthed parts, must be observed. This is especially relevant for applications in compliance with UL.

Detrimental effects from chemical substances during storage, processing and operation must be prevented.

In order to ease the locking of the busbar components and the insertion of the NH fuse units, the spring clips will be lubricated with special grease during manufacturing. On other parts, especially on screw threads, it must be ensured that no supplementary change of the friction coefficient takes place.

Note on operating NH fuse switch disconnectors and NH in-line fuse switch disconnectors

NH fuses are only intended for use by authorized electricians or trained electrical personnel, see IEC 60269-2. When switching devices observe the following instructions:

- Operation (release, switching on, switching off and fuse replacement) only permitted for authorized electricians or trained electrical personnel in accordance with VDE 0105-100.
- Quick activation of fuse cover using the relevant operating handle.
- Before switching on, care must be taken that the fuse cover is mounted or guided exactly into the open position.
- If the cover is only partially open, the fuse links may still be energized. Only open and close the cover using the handle.

Conductor connections

Specifications regarding conductor terminals are only valid for copper conductors. The maintenance-free resistance to ageing for selected connections has been verified by testing.

If the standards-compliant connection of aluminium conductors has been confirmed for connection terminals, this is stated expressly.
Before connecting aluminium conductors, any oxide deposits must be removed from the conductor surfaces and further oxidation prevented.
After removal of the oxide deposit, chips and abrasives cannot be permitted to damage the contacting.
Multiwire conductors should be shortened and exposed to the bare metallic conductor section.
The contact points are to be sealed (e.g. using acid-free contact grease) so that they airtight to protect them against further oxidation.

The terminal points need to be checked, taking operating conditions into account.
For normal ambient conditions and loads, we recommend inspections at 6-month intervals. In case of unfavourable operating conditions or frequent temperature fluctuations at the terminal points, a shorter interval may be necessary. It is possible to place temperature measuring strips and a record of the maximum values in the immediate vicinity of the terminal points, which may be useful for an objective assessment during regular tests.

All contact positions are suitable for connecting one conductor, unless expressly otherwise indicated. Double-function terminals are characterised by 2 contact positions.

In principle, the tightening torques specified on the device, the installation instructions or on the Internet are to be applied. Where no limits are specified, the tolerance on the tightening torque Md of screw and clamp connections may be a maximum of +/-20% of the nominal value.

The relationship between conductor cross-sections in mm^2 and AWG / MCM sizes are subsequently listed:

0.75mm^2	18 AWG	(0.82mm^2)
1.5mm^2	16 AWG	(1.3mm^2)
2.5mm^2	14 AWG	(2.1mm^2)
4mm^2	12 AWG	(3.3mm^2)
6mm^2	10AWG	(5.3mm^2)
10mm^2	8 AWG	(8.4mm^2)
16mm^2	6 AWG	(13.3mm^2)
25mm^2	4 AWG	(21.2mm^2)
35mm^2	2 AWG	(33.6mm^2)
50mm^2	0AWG	(53.5mm^2)
70mm^2	2/0AWG	(67.4mm^2)
95mm^2	3/0AWG	(85.0mm^2)
120mm^2	250 MCM	(127mm^2)
150mm^2	300 MCM	(152mm^2)
185mm^2	350 MCM	(177mm^2)
240mm^2	500 MCM	(253mm^2)
300mm^2	600 MCM	(304mm^2)

Conductor types are designated as follows:

	Abbreviation	Standard name
solid round	sol(r)	Class 1 (IEC/EN 60228)
stranded round	s(r)	Class 2 (IEC/EN 60228)
solid sectored	sol(s)	Class 1 (IEC/EN 60228)
stranded sectored	s(s)	Class 2 (IEC/EN 60228)
flexible	f	Class 5 (IEC/EN 60228)
stranded	str	Class B (UL 486E)

The following abbreviations are also used:

laminated flexible copper busbar	fl. Cu
wire-end ferrules	AE

Wire-end ferrules are only permitted for applications in compliance with IEC/EN standards. Wöhner has tested the use of wire end ferrules. These tests did not result in the approval of a specific ferrule and crimping method. The maximum conductor diameter may need to be reduced.
Conductors must be connected according to the requirements in compliance with IEC/EN 60999-1 or -2. Conductors must be connected so as to avoid tensile loading.

Dimensions

All lengths are given in millimetres, unless otherwise stated.
Mounting rails of adapters and clip-on fixings generally comply with EN 60715.

Using comb-type busbars

A range of Wöhner fuse holders and switches are suitable for use with comb-type busbars. We recommend that you used the comb-type busbars listed on the corresponding pages in the current Wöhner catalogue (IEC/EN 60439-1 or IEC/EN 61439-1/2, level of soiling: 2).

Ensure that the required air and creepage distances left in standard installation positions are observed (comb-type busbars are angled towards the operator).
Power must be supplied via the connection terminals sold separately by Wöhner.
The additional connection terminal is not required for Wöhner products with double-function terminals.

Processing and using plastic profiles

The mechanical, thermal and electric properties of the profiles, which are listed in the Wöhner catalogue, are optimised for covering busbars or busbar systems and bottom troughs. Take particular care when mechanically processing the profiles to avoid the formation of cracks (narrow saw blade, high speed of cutting, low tooth advance and strong saw guiding).

The cutting of profiles with a cap circular saw and an AKE circular saw blade for plastics is reliable with the following specific values:
D = 300mm, B = 2.2mm, Z = 120W
with 5° negative tooth change (w),
cutting speed of 50–65m/s,
tooth feed 0.05–0.1mm.
The plastic parts must be fixed in order to exclude vibrations.

When processing and using plastic profiles, contact with oil, grease and other chemicals must be avoided.

CE marking

Wöhner products are subject to the CE labelling requirement in connection with the Low Voltage Directive 73/23/EEC, as last amended by Council Directive 2006/95/EC.

The CE mark is applied to the individual packing units. Even some of the products are marked accordingly. In doing so, Wöhner confirms that the products comply with the valid regulations.

Wöhner holds the corresponding conformity declarations.

Additional requirements for compliance with UL

Components that have also been tested for feeder circuits up to 600V AC in compliance with UL 508A are labelled in the approval overview.

ROHS, WEEE and REACH

Wöhner products are not currently subject to the scope of ROHS Directive 2002/95/EC for restricting the use of specific dangerous substances in electrical and electronic devices and the WEEE Directive 202/96/EC concerning electrical and electronic old devices.

Irrespective of these directives, measures have been initiated, which ensure that the use of pollutant-free plastics complies with the ROHS Directive.

The metallic surface coatings shall correspond to the substance ban in accordance with the ROHS Directive.

Fuse links may contain function-specific components which do not comply with the ROHS Directive.

Depending on their respective functions, fuses may contain components that do not comply with the ROHS Directive.

As per the candidate list (version: 28.10.2008), article 59 (1, 10) of Regulation (EC) no. 1907/2006 ('REACH'), there are no substances in our products or their packaging with a concentration above 0.1%. We are in constant contact with our suppliers as regards substances subject to registration and information relevant to REACH is forwarded without delay to our customers.

You will find further information in the download area at **www.woehner.com**

Busbar supports

60mm-System compact
3-pole for busbars 12x5 and 12x10 as per IEC/UL
4-pole, 5-pole for busbars 12x5 as per IEC
With end cover, can also be used as a centre support

60mm-System in compliance with IEC
1-pole for busbars 12 x 5 – 30 x 10, double-T busbars
2-pole for busbars 12 x 5 – 30 x 10
3-pole for busbars 12 x 5 – 30 x 10 and 12/20/30 x 5/10
4-pole for busbars 12 x 5 – 30 x 10
3-pole for double-T and triple-T busbars

60mm-System in compliance with UL
3-pole for busbars 12/20/30 x 5/10
3-pole for double-T and triple-T busbars

100mm-System
3-pole for busbars 30 x 10 – 60 x 10

185mm-System power
3-pole for flat busbars up to 120mm width

3-pole for undrilled flat busbars 30–120 x 10,
double-T and triple-T section busbars

Typical arrangements of busbars have been tested in recognised laboratories for short-circuit strength.
The results are summarised on page 8/37 and 8/38.

Busbars, in compliance with EN 13601

Flat bus bars

Tin-plated copper busbars make contact position preparation much easier.
Cu busbars are effectively protected against corrosive substances.

The current capacities of flat busbars with components fitted in the table below were calculated by testing at an ambient temperature of 35°C under optimal conditions (IEC and UL).

Current carrying capacities higher than those specified in DIN 43 671 were obtained under operating conditions.
The busbar temperature is normally positively influenced by mounting components on the busbar and by air circulation within the installation.

A correction factor k_2 that complies with DIN 43 671 can be determined for flat busbars using the diagram on the right. The factor is dependent on the relevant ambient temperature. This correction factor should be taken into account when conditions change and loading is continuous.

Alternatively a higher load can be applied if the components have a higher thermal endurance level.

A 30 x 10 galvanised busbar can, under normal operating conditions, be loaded with 630A. A correction factor k_2 of 1.3, for example, is required if a load of 800A is applied. This diagram demonstrates that the busbar heats up to approx. 85°C if this correction factor and an air temperature of 35°C apply.

Permissible tolerance:
Radius R 0.3 ... 0.7
Width: + 0.1 / – 0.5
Thickness: + 0.1 / – 0.1
Centre spacing:
+ 0.5 / – 0.5 (60mm-System)
+ 1.0 / – 1.0 (100mm-System/
185mm-System power)
Deviation in the contact levels: 0.4

Dimensions	Cross sections	Current carrying capacities at busbar temperature of 65°C	85°C
12 x 5	60mm²	200A	250A
15 x 5	75mm²	250A	320A
20 x 5	100mm²	320A	400A
25 x 5	125mm²	400A	500A
30 x 5	150mm²	450A	550A
12 x 10	120mm²	360A	450A
20 x 10	200mm²	520A	630A
30 x 10	300mm²	630A	800A
40 x 10	400mm²	850A	1000A
50 x 10	500mm²	1000A	1200A
60 x 10	600mm²	1250A	1500A
80 x 10	800mm²	1500A	1800A
100 x 10	1000mm²	1800A	2100A
120 x 10	1200mm²	2100A	2500A

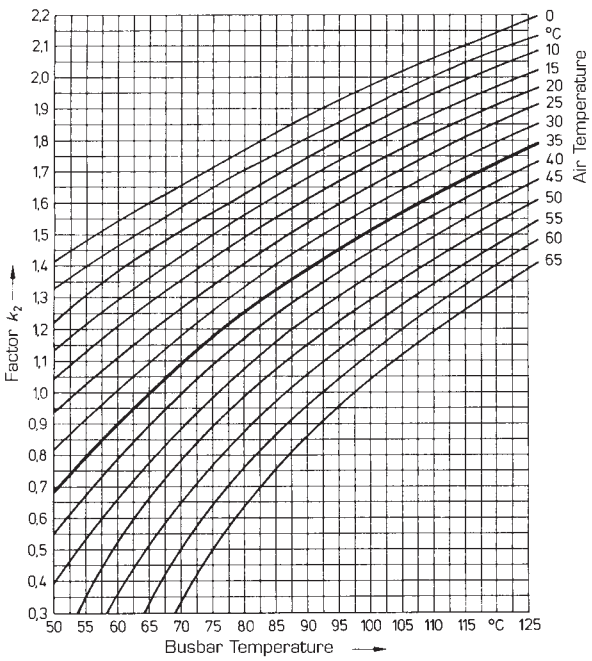

Busbars, in compliance with EN 13601

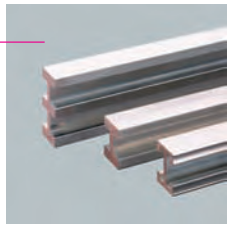

Section busbars

Tin-plated copper busbars make contact position preparation far easier.
Cu busbars are effectively protected against corrosive substances.

The following current capacities of flat busbars with components fitted were calculated by testing at an ambient temperature of 30°C under optimal conditions (IEC and UL).

Permissible tolerance:
Radius R 0.3 ... 0.7
Width: + 0.1 / – 0.5
Thickness: + 0.1 / – 0.1
Centre spacing:
+ 0.5 / – 0.5 (60mm-System)
+ 1.0 / – 1.0 (100mm-System/ 185mm-System power)
Deviation in the contact levels: 0.4

Dimensions	Cross sections	Current carrying capacities at busbar temperature of 85°C in compliance with IEC	Current carrying in compliance with UL508 (UL-File E123577)
Double T	500mm²	1250A	1200A
Double T	720mm²	1600A	1400A
Triple T	1140mm²	2500A	1800A / 2000A*

*staggered load

Current capacities of section busbars with components fitted

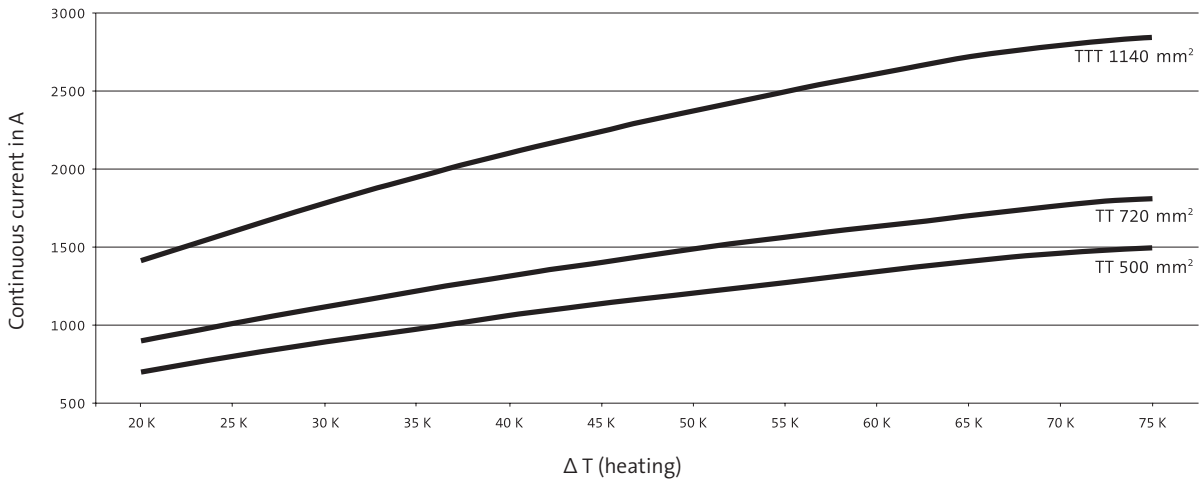

For the type verification "heating limits" corresponding to DIN EN 61 439-1, section 10.10, the way in which the components interact must be taken into consideration.

Universal conductor terminals

Universal conductor terminals are used to connect conductors with cross-sections extending from 1.5–120mm² to busbars with a thickness of 5 or 10mm. Installation is simplified by integrated retaining springs, open terminals and captive screws.

CRITO®ProfiClips for connecting round conductors 95–300mm² and flexible copper busbars. The clamp-type terminals enable the busbar to be gripped completely and conductors to be connected without drilling.

Conductors used	Current carrying capacity of contacts*	Terminal space W x H	Busbars W x H	Part no.
1.5–16mm² Cu, sol(r), s(r), f, f+AE**, fl. Cu 8 x 6 x 0.5	180A	7.5 x 7.5	... x 5	01 284
			... x 10	01 289
4–35mm² Cu, sol(r), s(r), f, f+AE**, fl. Cu 3/6 x 9 x 0.8	270A	10.5 x 11	... x 5	01 285
			... x 10	01 290
16–70mm² Cu, s(r), f, f+AE**,	400A	14 x 14	... x 5	01 287
2xla. Cu 3/6 x 9 x 0.8, 6 x 13 x 0.5			... x 10 TT, TTT	01 292
16–120mm² Cu, s(r), f, f+AE**, fl. Cu 4/6/10 x 15.5 x 0.8	440A	17 x 15	... x 5	01 068
			... x 10 TT, TTT	01 203
35–150 mm² Cu, s(r), f, f+AE**	480A		12–20 x 5–10	01 135
95–185mm² Cu, Al*** s(r), s(s), f	500A		20 x 5– 30 x 10 TT, TTT	01 318
120–300mm² Cu, Al*** s(r), s(s), f	600A		20 x 5–30 x 10 TT, TTT	01 760
fl. Cu 3 x 20 x 1 up to 10 x 24 x 1	750A	30 x 25	20 x 5–30 x 10 TT, TTT	01 319
fl. Cu 3 x 20 x 1 up to 10 x 32 x 1	800A	32 x 25	20 x 5–30 x 10 TT, TTT	01 759
95–300mm² Cu, Al***, sol(r), sol(s), s(r), s(s), f, f+AE**	630A		30 x 10 TT, TTT	01 094
fl. Cu 5 x 32 x 1 up to 10 x 40 x 1	1250A	41 x 25	30 x 10 TT, TTT	01 092
			40 x 10	01 032
			50 x 10	01 033
			60 x 10	01 034

* The specified ratings reflect the thermal capacity of the terminals under optimal conditions (with the largest connectable conductors).
The allocation of conductor cross-sections and current carrying capacities by national or international specifications does not affect the terminal's thermal capacity.

** Reducing the maximum conductor cross-sections may be required.

*** Connections with aluminium conductors are not maintenance-free (see page 8/2).

Explanation of abbreviations on page 8/2.
Additional terminal space details on page 9/1, 9/8 and 9/19.

Connecting terminal plates incl. cover Connection module, shock-protected

60mm distance between busbar centres
3-pole, 690V~

Conductors used	Current carrying capacity of contacts*	Terminal space W x H	Busbars W x H	Part no.
1.5–16mm² Cu, re, rm, f, f+AE**	80A		... x 5 – 10 TT, TTT	01 563
6–50 (70)mm² Cu, rm, f, f+AE**, la. Cu 6 x 9 x 0.8	300A	10 x 15	... x 5 – 10 TT, TTT	01 240
6–50 (70)mm² Cu, rm, f, f+AE**, la. Cu 6 x 9 x 0.8	300A	10 x 15	12 x 5 – 10	01 401
95–185mm² Cu, Al***, rm, sm, f	460A		20 x 5 – 30 x 10 TT, TTT	01 199
35–120mm² Cu, rm, f, f+AE**, se la. Cu 6/10 x 13/15.5 x 0.5/0.8	440A	15 x 15	... x 5 – 10 TT, TTT	01 243
35–150mm² Cu, rm, f, f+AE**	480A		12 x 5 – 10	01 165
120–300mm² Cu, Al***, rm, sm, f	560A		20 x 5 – 30 x 10 TT, TTT	01 754
la. Cu 3 x 20 x 1 up to 10 x 32 x 1	800A	32 x 25	20 x 5 – 30 x 10 TT, TTT	01 753

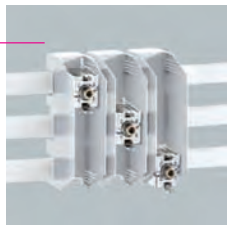

Connection set, 3-pole and 4-pole without cover

1-pole, 690V~

Conductors used	Current carrying capacity of contacts*	Terminal space W x H	Busbars W x H	Part no.
10–120mm² Cu, s(r), f	300A	15 x 15	12 x 5, 12 x 10	01 370
120–300mm² Cu, Al***, s(r), s(s), f	560A		20 x 5 – 30 x 10 TT, TTT	01 537 01 147
fl. Cu 3 x 20 x 1 up to 10 x 32 x 1	800A	32 x 25	20 x 5 – 30 x 10 TT, TTT	01 538 01 162

* The specified ratings reflect the thermal capacity of the terminals under optimal conditions (with the largest connectable conductors).
The allocation of conductor cross-sections and current carrying capacities by national or international specifications does not affect the terminal's thermal capacity.

** Reducing the maximum conductor cross-sections may be required.

*** Connections with aluminium conductors are not maintenance-free (see page 8/2).

Explanation of abbreviations on page 8/2.
Additional terminal space details on page 9/8.

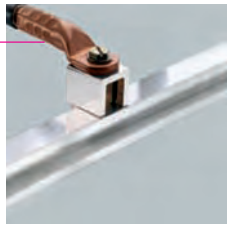

Clip-on screw connector

The clip-on screw connector is used to connect cables fitted with cable lugs as per DIN 46 234 and DIN 46 235 to busbars with a thickness of 5 or 10mm without the need for drilling.

Connection	Current carrying capacity of terminals*	Terminal space	Busbars W x H	Part no.
Cable lug, fl. Cu	360A	M5 x 8	...x 5	01 747
			... x 10	01 512
Cable lug, fl. Cu	490A	M8 x 8	...x 5	01 748
			... x 10 TT, TTT	01 514
Cable lug, fl. Cu	630A	M10 x 10	...x 5	01 749
			... x 10 TT, TTT	01 047

The specified ratings reflect the thermal capacity of the terminals under optimum conditions. Allocating conductor cross-sections and current carrying capacities by national or international specifications does not affect the terminal's thermal capacity.

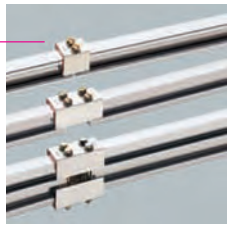

Busbar connectors

For the connection of identical busbars without drilling.

Current carrying capacity of terminals	Overall length	Permissible displacement busbar	Clamp screws	Spacing between systems	Part no.
630A	40	2mm	1 x M12	13 – 20	01 823
630A	40	2mm	2 x M8	9 – 20	01 990
630A	55	1mm	2 x M8	5 – 10	01 166
630A	95	5mm	2 x M10	50 – 60	01 141
630A	150	1mm	2 x M8	100 – 110	01 193
630A	150	5mm	2 x M12	100 – 110	01 886
1600A	50	2mm	2 x M8	9 – 20	01 827
1600A	95	5mm	4 x M8	50 – 60	01 145
1600A	150	5mm	4 x M8	100 – 110	01 829
2500A	95	2mm	4 xM8	50 – 60	01 274
2500A	150	2mm	4 xM8	100 – 110	01 275

The separating bar set (part no. 01 360 – 01 361) is needed to comply with the air distances required by UL 508A.
At typical ambient conditions the use of flexible connectors after 5m system length has been proven. In each case the distance of flexible connectors depends on the actual conditions, e.g. arrangement and equipment of the system, value, and speed of temperature fluctuations.

CRITO®PowerClip

The brace terminal for connecting flexible copper busbars. The clamp-type terminals enable the busbar to be gripped completely and conductors to be connected without drilling.

Current carrying capacity of terminals	Section	Terminal space W x H	Part no.
1600A/2000A*	30 x 10, TT, TTT	55 x 10 – 28	01 069
1600A/2000A*	30 x 10, TT, TTT	68 x 10 – 28	01 070
1600A/2800A*	30 x 10, TT, TTT	105 x 10 – 28	01 071

* current capacity for centre feeding

Use spacers provided when two flexible busbars are connected in parallel.

Profile terminals for double-T and triple-T section busbars

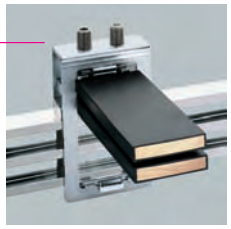

For the connection of laminated copper busbars.

Current carrying capacity of terminals	Section	Terminal space W x H	Part no.
1600A	double-T	51 x 5 – 28	01 906
1600A	double-T	64 x 5 – 28	01 907
1600A	double-T	41 x 20 – 42	01 185
1600A (2000A)*	double-T	51 x 20 – 42	01 936
1600A (2000A)*	double-T	64 x 20 – 42	01 911
1600A (2500A)*	double-T	81 x 20 – 42	01 934
1600A (2800A)*	double-T	101 x 20 – 42	01 935
2000A (2500A)*	triple-T	64 x 23 – 45	01 008
2500A (3200A)*	triple-T	101 x 23 – 45	01 186

* centre feeding

Use spacers provided when two flexible busbars are connected in parallel.

Busbar system for centre-feed unit

Rated operating voltage 690V~
Rated insulation voltage 1000V~
Double-T section busbars up to 2000A, 3 and 4-pole
Triple-T section busbars up to 3200A, 3-pole
Special profile up to 4000A, 3-pole

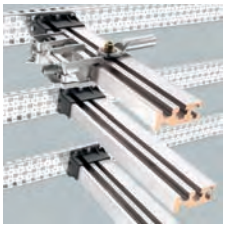

The incoming conductors should be arranged in such a way that the maximum current only flows through short busbar lengths to ensure the lowest possible temperature increases.

The centre-feed unit (part no. 35 004) was tested with the following components mounted:
12 terminals (part no. 01 318) for the incoming conductors and 3 profile terminals (part no. 01 911) – each with two flexible copper busbars 10 x 63 x 1 – for the outgoing conductors to the circuit breaker.
The centre feed unit with special TCC profiles enables connection with brace terminals and special connection screws. Connection screw M10 x 45 (01 379) is suitable for retrofitting; version M12 x 60 (01 380) cannot be retrofitted! The use of Wöhner's special connection screws is absolutely necessary!

EQUES® EasyConnector
EQUES® MotorController
Busbar adapters up to 80 A
60mm-System

3-pole, 690V~
can be fitted to all busbars in the 60mm-System.
Combination base accommodates busbars 5 and 10mm thick.
EN 60715 plastic mounting rail, for staggered arrangement in 1.25mm pitch.
Copper conductors, ultrasound-welded:

12/16A: AWG 14 1.8mm x 1.8mm
25A: AWG 12 2.3mm x 2.3mm
25A: terminals (Cu 0.75–6mm², sol(r), f, f+AE),
32A: spring terminals (1.5–6mm², sol(r), f, f+AE)
32A: AWG 10 2.9mm x 2.9mm
45A: AWG 8 3.2mm x 3.6mm
63A: AWG 8 3.2mm x 3.6mm
80A: terminals (Cu 1.5–16mm², sol(r), s(r), f, f+AE)

Short-circuit protection through current limitation of the associated switchgear.
Ensure cabling is shock-protected.

EQUES® MotorController, busbar adapter dividable

Up to size 45A also available with a lockable and removable upper section when separated.
The base remains shock protected on the bus bar system.
(Changeover) microswitch protects the load release. Rated operating voltage
(rated operating current) 250V AC (5A).

Busbar adapters 1-pole 32 A, 63 A
60mm-System compact

1-pole, 690 V~
Can be fitted on 12 x 5mm busbars.
Fixed mounting rails for snapping on automatic circuit breakers.
Copper conductor ultrasound-welded.

Short circuit protection by means of limiting the current of the assigned automatic circuit breakers.
Ensure cable is shock-protected.

Universal busbar adapters 200A/250A, special adapters 100A, busbar adapters 200A

for sharp-edged and rounded busbars (EN 12167/EN 13601).

Parameter	Universal adapter 200A	Universal adapter 250A	Adapter 250A
Type	3-pole, 690V~	3-pole, 690V~	3-pole, 690V~
Busbar system	60mm	60mm	100mm
Busbar contacting	claw terminals	claw terminals	claw terminals
Connecting switchgear	top or bottom	top or bottom	top
	box terminals Md 8–10Nm	box terminals Md 10–12Nm	clamps Md 3Nm
	Cu 6–70mm² s(r), f, f + AE, fl. Cu 10 x 16 x 0.8	Cu 35–120mm² s(r), f, f + AE, fl. Cu 10 x 20 x 0.8	Cu 6–70mm² s(r), f + AE

Universal busbar adapter 630A

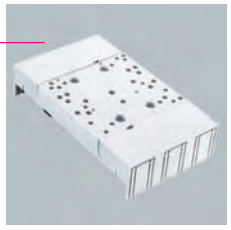

3-pole, 690 V~
For busbars 12 – 30mm and double-T and triple-T profiles
with screw connection M10 at bottom and top.

You can find the mounting options for the associated switchgear on the Internet at
www.woehner.com

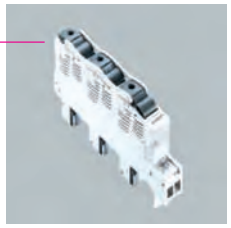

SECUR®PowerLiner, bus-mounting fuse switch disconnector for D0 and cylindrical fuses IEC 60269-3 or IEC 60269-2

VDE 0660 part 107 / EN 60947-3 / IEC 60947-3
3-pole switching
LED: 110 – 400V AC or 55–250V DC
Suitable for mounting on 60mm systems with undrilled busbars.
Cable connections at bottom.
Combination base accommodates busbars 5 and 10mm thick.
Fuses can be inserted into associated sockets; the fuses can be fitted with gauge rings if D0 fuses are used.
Captive fuse carrier.
Fuse may only be changed if the circuit has been fully interrupted by opening the switch lever.
Operator-independent busbar, fuse and switch mechanism contact.
Safe from finger-touch even when the switch lever is open.
Box terminals for conductor connection:
Cu 1.5 ... 6mm² (sol(r))
Cu 1.5 ... 16mm² (f)
Cu 1.5 ... 16mm² (f+AE)
Pilot switch to indicate the switch position:
1 changeover switch
Rated operating voltage (rated operating current) 250V AC (5A).

Type	for D0 fuses	for cylindrical fuses
		10 x 38
Type of current	AC (50Hz), DC	AC (50/60Hz)
Rated operating voltage (U_e)	400V AC 110V DC	up to 660 / 690V AC
Rated insulation voltage (U_i)	800V	800V
Rated surge withstand capacity (U_{imp})	6kV	6kV
Rated operating current (I_e)*	63A	up to 32A
Conditional rated short-circuit current**	50kA (AC) 8kA (DC)	50kA
Permissible power dissipation per phase for individual fuses without side modules in operation or for fuse groupings with side modules.	5.5W	3W

* When several devices are used side-by-side, the rated load factor specified according to VDE 0660 part 500/EN 60 439-1, table 1 should be observed. The distance to earthed parts must be at least 9mm.

** Type tested with fuses of characteristic gL/gG.

*** Type tested with three-pole switching model.

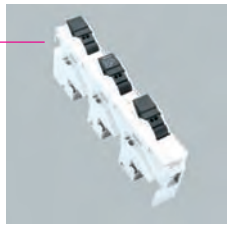

AMBUS®EasyLiner
Holder for cylindrical fuses IEC 60269-2

VDE 0660 part 107/EN 60947-3/IEC 60947-3
2 and 3-pole, optionally +N
LED: 110–700V AC/DC resp. 400–1000V DC
Suitable for mounting on 60mm systems with undrilled busbars.
Combination base accommodates busbars 5 and 10mm thick.

Screwless conductor connections
Complies with IEC: Cu 1.5 ... 6mm² (f)
Complies with UL/CSA: AWG 16 ... AWG 10 (str)

Size		10 x 38***	10 x 38
Type of current		DC	AC (50/60Hz)
Max. rated operating voltage (U_e)	IEC/EN	1000V DC	690V AC
	UL/CSA	–	600V AC
Rated insulation voltage (U_i)	IEC/EN	1000V	800V
Rated surge withstand capacity (U_{imp})	IEC/EN	6kV	6kV
Max. rated operating current (I_e)*	IEC/EN	32A	32A
	UL/CSA	–	30A
Utilisation categories	IEC/EN	DC-20B	AC-22B (500V) AC-21B (690V) AC-20B (690V) 3 Pole + N
	UL/CSA	–	only for use as fuse holder
Conditional rated short circuit current**	IEC/EN	–	100kA (400V, 500V, 690V)
	UL/CSA	–	50kA (600V)
For fuses with power dissipation per phase up to		3W	3W

* When several devices are used side-by-side, the rated load factor specified according to VDE 0660 part 500/EN 60 439-1, table 1 should be observed.

** Type tested with fuses of characteristic gL/gG.

*** Special model for photovoltaic applications

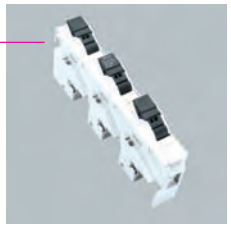

AMBUS®EasyLiner Class CC
Holder for Class CC fuses in compliance with UL 248-4

UL 4248-4
3-pole
LED: 110–600V AC
Suitable for mounting on 60mm systems with undrilled busbars.
Combination base accommodates busbars 5 and 10mm thick.

Screwless conductor connections
Complies with IEC: Cu 1.5 ... 6mm² (f)
Complies with UL/CSA: AWG 16 ... AWG 10 (str)

Size	Class CC
Rated voltage	600V AC
Rated current	30A
Conditional rated short circuit current	200kA

D02 bus-mounting fuse base, CUSTO® EasyLiner

IEC 60269-3 / VDE 0636-3
3-pole
60mm distance between busbar centres
Can be used with combination base for busbars 5 and 10mm thick in the 60mm system.
Fuses, gauge rings VDE 0636-301
When used with special retaining springs and special gauge rings, also suitable for D01.
Box terminals:
Cu 1.5–2mm² (f, f+AE), Cu 1.5–10mm² (sol(r))
With 36mm wide version, offers enhanced lead placement and heat dissipation.

TRITON®, D0 panel-mounting fuse base
Shock protection in compliance with EN 50274 / BGV A3

IEC 60269-3 / VDE 0636-3
1/3-pole
Fuses, gauge rings VDE 0636-3
Box terminals:
Cu 1.5–35mm² (f, f+AE), Cu 1.5–10mm² (sol(r))

CUSTO® EasyBase, D0 panel mounting fuse base

IEC 60269-3 / VDE 0636-3
1/3-pole
Fuses, gauge rings VDE 0636-3
Clip-on mounting for EN 60715 mounting rails
Dual-function terminal:
Cu 1.5–35mm² (f, f+AE)

Rated values according to IEC 60269-3 / VDE 0636-3

Size	D01	D02
Type of current	AC (50Hz) / DC	AC (50Hz) / DC
Rated voltage	400V AC / 250V DC	400V AC / 250V DC
Rated current	16A	63A
Conditional rated short circuit current	50kA (AC) 8kA (DC)	50kA (AC) 8kA (DC)
For fuses with power dissipation per phase up to	2.5W	5.5 W

D bus-mounting fuse base, CUSTO® EasyLiner

IEC 60269-3 / VDE 0636-3
3-pole
60mm distance between busbar centres
Can be used with combination base for 5 and 10mm thick busbars in the 60mm system.
Fuses, gauge rings or screw-in gauge rings VDE 0636-3
Both types have same external shape.
Box terminals:
DII Cu 1.5–25mm² (f, f+AE), Cu 1.5–10mm² (sol(r))
DIII Cu 1.5–35mm² (f, f+AE), Cu 1.5–10mm² (sol(r))

TRITON®, D panel-mounting fuse base
Shock protection in compliance with EN 50274/BGV A3

IEC 60269-3 / VDE 0636-3
1-/3-pole
Fuses, screw-in gauge rings VDE 0636-3
Box terminals:
Cu 1.5–35mm² (f, f+AE), Cu 1.5–10mm² (sol(r))

Rated values according to IEC 60269-3 / VDE 0636-3

Size	DII	DIII
Type of current	AC (50Hz) / DC	AC (50Hz) / DC
Rated voltage	500V AC / DC	500V AC / DC*
Rated current	25A	63A
Conditional rated short circuit current	50kA (AC) 8kA (DC)	50kA (AC) 8kA (DC)
For fuses with power dissipation per phase up to	4.0W	7.0W
* according to VDE 0636-3011 also 690V AC / 600V DC		

AMBUS®PowerSwitch, disconnectors with fuses for D0 fuses IEC 60269-3-1 (I) / VDE 0636-301 Shock protection in compliance with EN 50274 / BGV A3

VDE 0660 part 107/EN 60947-3/IEC 60947-3
VDE 0638
1, 2- and 3-pole / 1 and 3-pole + N as required
N-conductor leads at switch-on, trails at switch-off.
LED: 110– 400 V AC or 55–250 V DC
D02 fuses, gauge ring VDE 0636-301.
Reducer for D01 fuses.
Clip-on mounting for EN 60715 mounting rails.
Captive fuse carrier.
Fuse may only be changed if the circuit has been fully interrupted by opening the switch lever.
Operator-independent fuse contact.
Safe from finger-touch even when switch levers are open.
Dual-function terminal:
Cu 1.5 – 35mm² (f, f + AE)
Pilot switch to indicate the switch position:
1 N/O, 1 N/C
400V AC (2A), 24V DC (6A)

Type	Standard
Size	D02
Type of current	AC (50Hz) DC
Max. rated operating voltage (U_e)	400V AC / 460V AC 130V DC
Rated insulation voltage (U_i)	500V
Rated surge withstand capacity (U_{imp})	6kV
Rated operating current (I_e)	63A / 35A 63A
Utilisation category IEC 60947-3 all pole models 1 pole, 1 pole + N 3 pole, 3 pole + N 1 pole 2 pole	 AC-22 B 400V 63A AC-23 B 266V 35A AC-23 B 460V 35A DC-22 B 65V 63A DC-22 B 130V 63A
Utilisation category VDE 0638	AC-22 400V 63A
Conditional rated short circuit current*	50kA (AC) 8kA (DC)
For fuses with power dissipation per phase up to	5.5W

* Type tested with fuses of characteristic gL/gG.
400V AC / 250V DC – 63A or 440V AC – 35A.

AMBUS®EasySwitch, Holder for cylindrical fuses IEC 60269-2

VDE 0660 part 107/EN 60947-3/IEC 60947-3
1, 2- and 3-pole, 1 and 3-pole + N as required
LED: 12–72V AC/DC resp. 110–690V AC/DC resp. 400–1000V DC

Pilot switch:
1 changeover switch 250V AC (5A), 30V DC (4A)
Flat lug 2.8 x 0.5mm (e.g. DIN 46 245)

Clip-on mounting on EN 60715 mounting rail

Conductor terminals:

Size	Conductor terminals according to IEC		Conductor terminals according to IEC UL / CSA	
8 x 31	1x Cu 0.75–25mm²	f, f+AE		
	2x Cu 0.75–10mm²*	f, f+AE		
10 x 38	1x Cu 0.75–25mm²	f, f+AE	1x AWG 18 – AWG 4	str
	2x Cu 0.75–10mm²*	f, f+AE	2x AWG 18 – AWG 6 *	str
Integrated N-pole	1x Cu 1.5–10mm²	f, f+AE		
14 x 51	1x Cu 1.5–35mm²	f, f+AE	1x AWG 14 – AWG 2	str
22 x 58	1x Cu 4–50mm²	f, f+AE	1x AWG 10 – AWG 1/0	str

* 2 identical conductors next to each other in the contact position

Overall size		8 x 31**	10 x 38****	10 x 38	14 x 51	22 x 58
Current type		AC (50/60Hz)/DC	DC	AC (50/60Hz)/DC	AC (50/60Hz)/DC	AC (50/60Hz)/DC
Maximum rated operating voltage (U_e)	IEC/EN	400V AC / 250V DC	1000V DC	690V AC / 440V DC	690V AC / 440V DC	690V AC / 440V DC
	UL/CSA	–	–	600V AC / DC	600V AC / DC	600V AC / DC
Rated insulation voltage (U_i)	IEC/EN	400V	1000V	800V	800V	800V
Rated surge withstand capacity (U_{imp})	IEC/EN	6kV	6kV	6kV	6kV	6kV
Rated operating current (I_e)	IEC/EN	25A	32A	32A	50A	100A / 125A***
	UL/CSA	–	–	30A	50A / 40A	80A
Application category, version 1P, 1P+N, 2P	IEC/EN	AC-20B (400V)	DC-20B	AC-22B (400V)	AC-22B (400V)	AC-20B (690V)
	UL/CSA	–	–	only applicable as fuse holder		
Application category, version 3P, 3P+N	IEC/EN	AC-20B (400V)	–	AC-22B (690V)	AC-21B (690V)	AC-20B (690V)
	UL/CSA		–	only applicable as fuse holder		
Conditional rated short-circuit current (AC)*, version 1P, 1P+N, 2P	IEC/EN	50kA (400V)	–	50kA (400V)	100kA (400V)	100kA (500V)
	UL/CSA	–	–	50kA (600V)	50kA (600V)	50kA (600V)
Conditional rated short-circuit current (AC)*, version 3P, 3P+N	IEC/EN	50kA (400V)	–	50kA (400V)	100kA (400V)	100kA (500V)
	UL/CSA	–	–	50kA (600V)	50kA (600V)	50kA (600V)
Allowable power dissipation for each fuse, standard version		2.6W	3W	3W	5W	9.5W
Allowable power dissipation for each fuse, semi-conductor protection version	aR/gR	–	–	4.3W (10mm², 25A)	6.5W (25mm², 40A)	11W (50mm², 80A)

* Type tested with fuses of characteristic gL/gG, more information at www.woehner.com
** Pollution degree 2
*** Continuous operation with max. 115A (50mm²) resp. 107A (35mm²)
**** Special edition for photovoltaic applications

AMBUS®EasySwitch Class CC, Holder for Class CC fuses in compliance with UL 248-4

UL 4248-4
1, 2- and 3-pole
LED: 12–72V AC resp. 110–600V AC
Clip-on mounting for EN 60715 mounting rails

Conductor terminals:

Conductor terminals according to IEC		Conductor terminals according to UL / CSA	
1x Cu 0.75–25mm²	f, f+AE	1x AWG 18 – AWG 4	str
2x Cu 0.75–10mm²*	f, f+AE	2x AWG 18 – AWG 6*	str

* 2 identical conductors next to each other in the contact position

Size	Class CC
Rated voltage	600V AC / DC
Rated current	30A
Conditional rated short circuit current AC	200kA

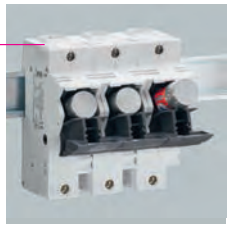

AMBUS®J-Carrier Holder for Class J fuses in compliance with UL 248-8

UL 4248-4
1-, 2- and 3-pole
LED: 110–600V AC
Clip-on mounting for EN 60715 mounting rails

Conductor terminals:

Size	Conductor terminals according to IEC		Conductor terminals according to UL / CSA	
0–30A (21x57)	1x Cu 0.75 – 1mm²	f, f+AE		
	1x Cu 1.5 – 50mm²	f, f+AE	1x AWG 18 – AWG 1	str
	2x Cu 0.75 – 1mm²*	f, f+AE		
	2x Cu 1.5 – 10mm²*	f, f+AE	2x AWG 18 – AWG 6*	str
31–60A (27x60)	1x Cu 2.5 – 50mm²	f, f+AE	1x AWG 14 – AWG 1	str
	2x Cu 2.5 – 16mm²*	f, f+AE	2x AWG 14 – AWG 6*	str

* 2 identical conductors next to each other in the contact position

Size	0–30A	31–60A
Rated voltage	600V AC / DC	600V AC / DC
Rated current	30A	60A
Conditional rated short circuit current AC	200kA	200kA

QUADRON®CrossLinkCarrier Class J
Fuse bases for Class J fuses in compliance with UL 248-8

UL 4248-8
Busbar-mounting
3-pole
Shock-protected

Busbar-mounting version:
For mounting on 60mm system to busbars with a thickness of 5 or 10mm, TT and TTT section bars
Screwless busbar contacting; Gentle snapping onto busbar systems.
Conversion from outgoing connection top to bottom by changing connection modules.

Panel-mounting version:
For screwing to mounting plate and fitting to 2 mounting rails EN 60715 at a distance of 125 or 150 mm.

Conductor connections:

Size	Conductor connections according to IEC	Conductor connections according to UL /CSA
1–30A (21 x 75)	Cu 6–70mm² (re/rm, f, f+AE*)	Cu AWG 14-AWG 2/0, str
31–60A (27 x 60)	Cu 6–70mm² (re/rm, f, f+AE*)	Cu AWG 14-AWG 2/0, str
61–100A (29 x 117)	Cu 6–70mm² (re/rm, f, f+AE*)	Cu AWG 14-AWG 2/0, str
101–200A (41 x 146)	Cu 35–150mm² (re/rm, f, f+AE*)	Cu AWG 2-MCM 300, str

* possible reduction of the maximum conductor cross-sections necessary

Size	1–30A	31–60A	61–100A	101–200A
Rated voltage	30A	60A	100A	200A
Rated current	600V	600V	600V	600V
Conditional rated short circuit current AC	200kA	200kA	200kA	200kA

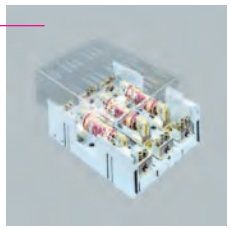

QUADRON®J-Carrier
Fuse bases for Class J fuses in compliance with UL 248-8

UL 4248-8
Panel-mounting and busbar-mounting
3-pole
Shock protected by clip-on covers

Panel-mounting version:
100A, 200A: mounting on 2 EN 60715 mounting rails with a spacing of 125 or 150mm using the mounting set.

Busbar-mounting version:
For mounting on 60mm system to busbars with a thickness of 10mm, TT and TTT section bars.
Screwless busbar contacting; Gentle snapping onto busbar systems.
Conversion from outgoing connection top to bottom by changing connection modules.

Conductor connections:

Size	Conductor connections according to IEC	Conductor connections according to UL /CSA
210–400A (54 x 181)	Cu 16–300mm² (s(r), f, f+AE*)	Cu AWG 4-MCM 600, str

* possible reduction of the maximum conductor cross-sections necessary

Size		201–400A
Rated voltage		600V AC / DC
Rated current		400A
Conditional rated short circuit current AC	Panel-mounting version	200kA
	Busbar-mounting version	65kA

QUADRON®CrossLinkCarrier, NH fuse base for fuse links IEC 60269-2 / VDE 0636-2 Size 00

3-pole
Suitable for mounting on a 60mm system with undrilled busbars by locking it into place.
Refitting a connection for top or bottom.

Conductor connections:

Size	Screw connection	Clamp connection	Clamp space terminal box	Prism connection	Other connections
00	M8 70mm²***	Cu 1.5–70mm² rm, f+AE, la. Cu 12x (1–10) mm	Cu 1.5–70/95mm² f, f+AE Cu 1.5–70mm² re, rm 2x10–25mm² f+AE, Identical conductors, side by side, square crimping 2x6–50mm² f, identical conductors, side by side la. Cu 10–13mm wide Clamp space 13 x 13mm	Cu, Al* 16–70mm² rm, sm, f, f+AE	Tunnel terminal 3 x Cu 1.5–16mm² rm, f+AE Md 3 Nm
1	M10 120mm²**	Cu 70–150mm² rm, f, f+AE, la. Cu 18 x (2–14) mm	Cu 35–185mm² f Cu 35–15mm² rm Cu 35–120mm² f+AE la. Cu 15.5–24 mm wide Clamp space 24.5 x 21mm	Cu, Al* 70–150mm² rm, sm, f, f+AE	Double prism Cu, 2 x 35–70mm² rm, sm, f+AE 2 x 70mm² f

* Connections with aluminium conductors are not maintenance-free (see page 8/2).
** Copper conductor for corresponding rated currents according to IEC/EN 60947-1.

Size	00	1
Type of current	AC (50–60Hz) / DC	AC (50–60Hz) / DC
Rated operated voltage (U_e)	800V	800V
Rated current	160A	250A
For VDE 0636-2 NH fuse links with up to 12 W of power dissipation per phase	12W	32W

* For continuous operation of several devices side by side, observe the rated load factor as per VDE 0660, Part 500/IEC/EN 60439-1, Table 1 and IEC/EN 61439-2, Table 101.

NH fuse base NH-1XL, 250 A, 1-pole for fuse links IEC 60269-6 / VDE 0636-6 Gr. 1XL (189mm long)

1-pole, 1000V AC, 1500V DC
Max. power dissipation of the fuse links 36 W.

Connection contacts:
– Size 1 M10 screw
– Size 1 wedge clamp terminal Cu, Al* 50–240mm², rm, sm, f, f+AE
* Connections with aluminium conductors are not maintenance-free (see page 8/2).
Outgoing connection busbar max. 2 x 30 x 10

NH bus-mounting fuse bases 690V~/440V- for fuses IEC 60269-2 / VDE 0636-2 size 00–1–2–3

1/3-pole
Size 00 to 160A / size 1 to 250A / size 2 to 400A / size 3 to 630A
Max. power dissipation:
Size 00: 12W / size 1: 32W / size 2: 45W / size 3: 60W
Outgoing contacts:
- size 00 screw M8
- size 00 clamp Cu 1.5–70mm², s(r), f+AE, fl. Cu max. 12 x 10mm
- size 00 tunnel terminal 3 x Cu 16mm², each 2 x M5
- size 1 screw M10
- size 2 screw M10
- size 3 screw M12

NH fuse bases 690 V~/440V- for fuses IEC 60269-2 / VDE 0636-2 size 00 – 1 – 2 – 3

1/3-pole
Size 00 to 160A / size 1 to 250A / size 2 to 400A / size 3 to 630A
Max. power dissipation:
Size 00: 12W / size 1: 32W / size 2: 45W / size 3: 60W
Outgoing contacts:
- size 00 screw M8, Md 12–14Nm
- size 00 clamp Cu 1.5–70mm², s(r), f+AE, fl. Cu max. 12 x 10mm, Md 3Nm
- size 1 screw M10, Md 18–22Nm
- size 1 clamp 2xM6, Md 8–10Nm, internal width 17mm
- size 2 screw M10, Md 18–22Nm
- size 3 screw M12, Md 28–32Nm

QUADRON® CrossLinkBreaker, QUADRON® VolBreaker, NH-bus mounting fuse switch disconnector for fuse links IEC 60269-2 / VDE 0636-2 size 000 – 00 – 1 – 2 – 3 – 4A

Panel- and busbar-mounting

3-pole switching
VDE 0660 part 107/EN 60947-3/IEC 60947-3
Shock protection with integrated positive action closure and arc chambers.
Fuses with mechanical retention in disconnector lid.
Front-side degree of protection IP30 as per EN 60529, degree of protection near terminal depends on installation.
Test openings in disconnector lid self-closing.
Recommended mounting position: handle at top.

Busbar-mounting version:
60mm system (sizes 000, 00, 1, 2, 3)
Screwless busbar contacting.
Locks on and makes contact easily and securely.
Refitting a connection for top or bottom is easy.

Panel-mounting version:
– size 000: Fixing on 1 EN 60715 mounting rail with 112.5 or 125mm spacing using fast fixing plate.
– size 00, 1, 2: Fixing on 2 EN 60715 mounting rails with 125 or 150mm spacing using fixing kit.

Size	000	00
Type of current	AC (50–60Hz)	AC (50–60Hz)
	DC	DC
Rated operating voltage (U_e)**	690V AC	690V AC
	440V DC	440V DC
Rated insulation voltage (U_i)**	800V	800V
Rated surge withstand capacity (U_{imp})**	6kV	6kV
Max. rated operating current (I_e)*	125A	160A
Conditional rated short-circuit current***	50kA	50kA
For NH-fuses VDE 0636-2 with power dissipation per phase to	9W	12W

* For continuous operation of multiple devices next to one another, observe the rated load factor as specified in VDE 0660 Part 500/IEC/EN 60439-1, Table 1 and IEC/EN 61439-2, Table 101.

** Electromechanical fuse monitoring AC 24–690V, DC 24–250V (mains connections). DC specifications: 2 current paths (L1, L3) in series.

*** Type tested with fuses of characteristic gL/gG.

Size	1	2	3	4 a
Type of current	AC (50–60Hz)	AC (50–60Hz)	AC (50–60Hz)	AC (50–60Hz)
	DC	DC	DC	DC
Rated operating voltage (U_e)**	690V AC	690V AC	690V AC	690V AC
	440V DC	440V DC	440V DC	440V DC
Rated insulation voltage (U_i)**	800V	800V	800V	800V
Rated surge withstand capacity (U_{imp})**	6kV	6kV	6kV	8kV
Rated operating current (I_e)*	250A	400A	630A	1600A
Conditional rated short-circuit current***	50kA	50kA	50kA	50kA
For VDE 0636-2 NH fuses of all operating classes with power dissipation per phase	23W	34W	48W	140W

* For continuous operation of multiple devices next to one another, observe the rated load factor as specified in VDE 0660 Part 500/IEC/EN 60439-1, Table 1 and IEC/EN 61439-2, Table 101.

** Electromechanical fuse monitoring AC 24–690V, DC 24–250V (mains connections).
DC specifications: 2 current paths (L1, L3) in series.

*** Type tested with fuses of characteristic gL/gG.

NH switch disconnector, size NH 1, arc chamber retrofit package for higher utilisation category as an accessory.

Pilot switch for lid position indicator:
Size 00: 1 (changeover) switch can be used.
Size 000, 1, 2, 3: 2 (changeover) switches can be used.
Connections by means of receptacles for tabs 2.8 x 0.5mm (e.g. DIN 46245)
Rated operating voltage (rated operating current):
250V AC (5A), 30V DC (4A).

Fuse monitor (size 00, 1, 2, 3):
Use fuses with live grip lugs.

For electronic fuse monitoring see **www.woehner.com**

Electromechanical fuse monitoring:
Integrated auxiliary switch: 1 N/O + 1 N/C
Rated operating voltage (rated operating current):
Outgoing auxiliary contacts, conductor connection 4-pole plug 1.5mm^2 re / f/AE
Rated operating voltage (rated operating current):
24V AC (2A), 230V* AC (0.5A)
24V DC (1A), 48V DC (0.3A), 60V DC (0.15A)
Circuit diagram on page 9/36.
* Level of soiling 2, excess voltage category II

Conductor connections:

Size	Screw connection	Clamp connection	Clamp space for flat conductor	Prism connection	Other connections
000	–	–	2.5–50mm² f 1.5–50mm² f+AE, sol(r)/s(r) fl. Cu 6–9mm wide terminal space 10 x 10mm	–	
00	M8 70mm²***	Cu 1.5–70mm² s(r), f+AE, fl. Cu 12 x (1–10)mm	Cu 1.5–70/95mm², f, f+AE Cu 1.5–70mm², sol(r), s(r) 2x10–25mm² f+AE, identical conductors, aligned side by side, square crimping 2x6–50mm² f, identical conductors, aligned side by side, fl. Cu 10–13mm wide terminal space 13 x 13mm	Cu, Al* 16–70mm² s(r), s(s), f, f+AE	tunnel terminal 3 x Cu 1.5–16mm² s(r), f+AE Md 3 Nm
1	M10 120mm²***	Cu 70–150mm² s(r), f, f+AE, fl. Cu 18 x (2–14)mm	Cu 70–185mm² f Cu 35–150mm² rm Cu 35–120mm² f+AE la. Cu 15.5–24mm wide Clamp space 24.5 x 21mm min. clamp space height 3mm	Cu, Al* 35–150mm² rm, sm, f, f+AEE	** double prism Cu, 2 x 35–70mm² s(r), s(s), f+AE 2 x 70mm² f
2	M10 240mm²***	Cu 120–240mm² s(r), f+AE, fl. Cu 21 x (1–14)mm	–	Cu, Al* 50–150/ 120–240mm² s(r), s(s), f, f+AE	** double prism Cu, 2x70–120mm² s(r), s(s), f+AE
3	M12 2x 185mm²***	Cu 150–300mm² s(r), f+AE, fl. Cu 25 x (1–13)mm	–	Cu, Al* 150–300mm² s(r), s(s), f, f+AE	** double prism Cu, 2x150/185mm² s(r), s(s), f+AE
4a	2xM12	–	–	–	–

* Connections with aluminium conductors are not maintenance-free (see page 8/2).
** Not to be applied for device versions with electromechanical fuse monitors.
*** Copper conductor for appropriate rated currents according to IEC/EN 60947-1.

Comb-type busbars and connection terminals for QUADRON®CrossLinkBreaker NH, size 000/00:

Recommended assembly situation: Feed with the comb-type busbar in case of NH-LTS from below:
In case of differing fitting positions, reductions must be regarded.
Protection type: IP 20 frontally in connection with NH-LTS, comb-type busbars and connections terminals possible.
Protection type depends on assembly in the connection area.
Shock protection: According to EN 50274/BGV A3.
Rated operating voltage: 690V AC /440V DC.
Rated insulation voltage: 800V at contamination level 2; 690V at contamination level 3.
Rated surge withstand capacity: 6kV.
Rated surge withstand capacity: 25kA/400V.
Rated short-time withstand capacity: 12.5kA–100ms/400V.
Size 000: connection terminal: Cu 6–35mm² sol(r), s(r); Cu 4–25 f, f+AE (max. connection diameter 11mm).
Comb-type busbar cross-section: 35 mm².
Size 00: Connection terminal: Cu 25–95mm² sol(r), s(r); Cu 35–95mm² s(s) ; Cu 25–70mm² f+AE (quadratic or trapezoid pressed, max. connection diameter 14mm).
Rated current: supply centre 1 x 260A / 2 x 260A; supply side 1 x 130A (see table).

Rated current according to test assembly EN 60947-3 at an environment temperature of 25°C:

Assembly	Position	Ingoing feeder Comb-type busbar	Operating current	NH-fuse gL/gG	Outgoing feeder NH-LTS
Double centre feed with 95mm², 4 NH-LTS size 00, 2 x 260A with connection terminals	Exterior	–	140A	160A	70mm²
	Interior	95mm²	120A	125A/160A	70mm²
	Interior	95mm²	120A	125A/160A	70mm²
	Exterior	–	140A	160A	70mm²
Centre feed with 95mm², 3 NH-LTS size 00, 1 x 260A with connection terminals	Exterior	–	50A	63A	16mm²
	Interior	95mm²	160A	160A	70mm²
	Exterior	–	50A	63A	16mm²

The allocation of conductor cross-sections and current capacities according to national and international specifications as well as installation conditions must be regarded.

QUADRON®CrossLinkSwitch
NH busbar-mounting switch disconnector with NH fuses for fuses IEC 60269-2 / VDE 0636-2

Panel-mounting and busbar-mounting

VDE 0660 part 107 / EN 60947-3 / IEC 60947-3
3-pole switching, double-breaking main contacts.
Safe, operator-independent switching, lockable in neutral position, with up to 3 padlocks.
Can be used as a mains disconnector as per IEC/EN 60204-1 (main switch).
Also as an emergency switch in combination with the reddish-yellow door coupling twist handle.
Additional air gap can be seen by removing the lid, including fuses.
Shock protection complies with EN 50274.
Fuse links are mechanically locked in the lid.
Front-side degree of protection IP30 as per EN 60529, degree of protection near terminal depends on installation.
Test openings in lid are self-closing.
Recommended mounting position: handle at top.

Busbar-mounting version:
Mounting on a 60mm system (size 00/1).
Screwless busbar contacting.
Gentle snapping onto busbar systems.

Panel-mounting version:
– size 00/1: to be screwed on to mounting plate

Conductor connections:

Size	Screw connection	Clamp connection	Clamp space for flat conductor	Prism connection	other connections
QCS-NH00	–	–	Cu 1.5–70/95mm², f, f+AE Cu 1.5–70mm², sol(r), s(r) 2 x (10–25)mm² f+AE, identical conductors, aligned side by side, square crimping, 2 x (6–50) mm² f, identical conductors, aligned side by side, fl. Cu 10–13mm wide terminal space 13 x 13mm	–	connection terminal Cu, 35–95mm² sm Cu, 25–70mm² f+AE Cu, 25–120mm² s(r)
QCS-NH1	M10 120mm²**	Cu 70–150mm² s(r), f, f+AE, fl. Cu 18 x (2–14) mm	Cu 70–185mm², s(r), Cu 35–150mm² rm Cu 35–120mm² f+AE la. Cu 15.5–24mm wide terminal space 24.5 x 21mm min. clamp space height 3mm	Cu, Al* 35–150mm² rm, sm, f, f+AE	double prism Cu, 2 x 35–70mm² rm, sm, f+AE 2 x 70mm² f

* Connections with aluminium conductors are not maintenance-free (see page 8/2).
** Copper conductor for appropriate rated currents according to IEC/EN 60947-1

Size	00	1
Type of current	AC (50–60Hz)	AC (50–60Hz)
	DC	
Max. rated operating voltage (U_e) ** Rated insulation voltage (U_i) **	690V AC, 440 V DC 800V	690V AC 800V
Rated surge withstand capacity (U_{imp}) **	6kV	6kV
Max. rated operating current (I_e)*	125A	250A
Conditional rated short-circuit current with fuses gG	50kA size 00; 125A – 690V	50kA size 1; 250A – 690V
For VDE 0636-2 NH fuses of all operating classes with power dissipation per phase	10W	23W

* For continuous operation of multiple devices next to one another, observe the rated load factor as specified in VDE 0660 Part 500/IEC/EN 60439-1, Table 1 and IEC/EN 61439-2, Table 101.

** Electronic fuse monitoring 2/3 x AC 65–690 V, DC 65–250 V (L1, L3) (mains connections, U_{imp} 6 kV, level of soiling 3).

Pilot switch for lid position indication
1 (changeover) switch can be used
Connections by means of receptacles for tabs 2.8 x 0.5 mm (e.g. DIN 46245)
Rated operating voltage (rated operating current)
250V AC (5A), 30V DC (4A)

Electronic fuse monitoring:
– No auxiliary power required, mains voltage (L1 and L3) must be present
– Test button to simulate fuse failure
– Automatic reset after fuse replacement
Green LED on: ready
Red LED on: Fuse has blown in at least one phase, no display if mains voltage not present
Output (auxiliary contacts):
– N/O / N/C, isolated, a.c. 3A/250V*, d.c. 5A/30V, d.c. 0.2A/250V*
– Conductor connection 4-pole plug up to 1.5mm² sol(r)/f/AE
Circuit diagram on page 9/33
* Level of soiling 2, excess voltage category II

Door coupling twist handle IP 66, lockable in neutral position, with up to 3 padlocks, with door interlock that can be activated

QUADRON®CrossLinkSwitch
Bus-mounting switch disconnector

Panel-mounting and busbar-mounting

VDE 0660 part 107 / EN 60947-3 / IEC 60947-3
3-pole switching, double-breaking main contacts.
Operator-independent, Safe switching, lockable with 3 padlocks in OFF position.
Shock protection complies with EN 50274.
Can be used as a mains disconnector as per IEC/EN 60204-1 (main switch).
Also as an emergency switch in combination with the red-yellow door coupling twist handle.
Front-side degree of protection IP30 as per EN 60529, degree of protection near terminal depends on installation.
Recommended mounting position: handle at top.

Busbar-mounting version:
Mounting on a 60mm system (160A, 320A).
Screwless busbar contacting.
Gentle snapping onto busbar systems.

Panel-mounting version:
– (160A, 320A): to be screwed on to mounting plate.

Size	160A	320A
Type of current	AC (50–60Hz)	AC (50–60Hz)
Max. rated operating voltage (U_e)	690V AC	690V AC
Rated insulation voltage (U_i)	800V	800V
Rated surge withstand capacity (U_{imp})	8kV	8kV
Max. rated operating current (I_e)*	200A	320A
Rated short-circuit making capacity	7kA (690V AC)	**
Short-circuit withstand capacity	4.5kA-1s (690V AC)	**
Conditional rated short-circuit current with series fuses gG	50kA size 00; 125A – 690V	50kA size 1; 250A – 690V

* For continuous operation of multiple devices next to one another, observe the rated load factor as specified in VDE 0660 Part 500/IEC/EN 60439-1, Table 1 and IEC/EN 61439-2, Table 101.

** Testing in progress as of editorial deadline, current values available at **www.woehner.com**

Pilot switch for lid position indication
1 (changeover) switch can be used
Connections by means of receptacles for tabs 2.8 x 0.5 mm (e.g. DIN 46245)
Rated operating voltage (rated operating current)
250V AC (5A), 30V DC (4A)

Door coupling twist handle IP 66, lockable in neutral position, with up to 3 padlocks, with door interlock that can be activated

Conductor connections:

Size	Screw connection	Clamp connection	Clamp space for flat conductor	Prism connection	Other connections
QCS 160	–	–	Cu 1.5–70/95mm², f, f+AE Cu 1.5–70mm², sol(r), s(r) 2 x (10–25)mm² f+AE, identical conductors, side by side, square crimping, 2 x (6–50)mm² f, identical conductors, side by side fl. Cu 10–13mm wide terminal space 13 x 13mm	–	connection terminal Cu, 35–95mm² s(s) Cu, 25–70mm² f+AE Cu, 25–120mm² s(r)
QCS 320	M10 185mm²** 320A	Cu 70–150mm² s(r), f, f+AE, fl. Cu 18 x (2–14)mm 250A	Cu 70–185mm² f / 300A Cu 35–150mm² rm / 275A Cu 35–120mm² f+AE / 250A la. Cu 15.5–24mm wide / 300A Clamp space 24.5 x 21mm min. clamp space height 3mm	Cu, Al* 70–150mm² rm, sm, f, f+AE 250A	double prism Cu, 2 x 35–70mm² rm, sm, f+AE 2 x 70 mm² f 250A

* Connections with aluminium conductors are not maintenance-free (see page 8/2).

SECUR®LeanStreamer, NH-in-line-fuse disconnectors for fuses IEC 60269-2 / VDE 0636-2 size 00

VDE 0660 part 107 / EN 60 947-3 / IEC 60 947-3
3-pole switching
Outgoing connection top and bottom.
Arc chamber.
Shock-protected even with lid open and in park position.
Mechanical fuse retention.
Degree of protection IP30 (front side), degree of protection near terminal depends on installation.

Connection contacts:
– M8 screw; 2x M5 clamp, 12mm clear width
– Prism clamp terminal Cu, Al* 16–70mm² s(r), s(s), f +AE
(* Connections with aluminium conductors are not maintenance-free (see page 8/2)

For 60mm distance between busbar centres:
– screwless busbar contacting
For 100mm distance between busbar centres:
– screw-on connection to drilled busbars, screw M8
– mounting without drilling using a terminal clamp
For 185mm distance between busbar centres:
– with an adapter
  for screwing onto undrilled busbars, screw M12
  mounting without drilling using a terminal clamp
– with a double adapter
  for screwing onto drilled busbars, screw M12

Type	3-pole switching
Type of current	AC (50–60Hz)
Rated operating voltage (U_e)**	690V AC
Rated insulation voltage (U_i)**	1000V
Rated surge withstand capacity (U_{imp}) without fuse monitoring**	8kV
Rated operating current (I_e)*	160A
Utilisation categories without fuse monitoring**	AC-22B (690V) AC-23B (400V) AC-23B (500V 125A)
Conditional rated short-circuit current***	50kA
For VDE 0636-2 NH fuses of all operating classes with power dissipation per phase	12W

* During continuous operation, the rated load factor specified according to VDE 0660 part 500 / EN 60 439-1, table 1, must be observed.
For AC-23B, the distance to earthed parts must be at least 50mm at the top and 25mm at the side.

** Fuse monitoring U_e, U_i 400V AC, U_{imp} 4kV, level of soiling: 2 (mains connections)

*** Type tested with fuses of characteristic gL/gG.

Pilot switch for lid position indication:
2 (changeover) switches can be used
Rated operating voltage (rated operating current) 250V AC (5A), 30V DC (4A)

Electronic fuse monitoring:
2 LEDs
with latching properties or remote reset, programmable using
2 changeover switches
2 x Cu 2.5mm² solid conductors, DIN 46 288 or
2 x Cu 1.5mm² stranded conductors with sleeves, DIN 46 228-1/-2/-3
The internal resistance of the measuring needle lies above the MOhm level and thereby meets
VDE requirements regarding contact voltage (>1000 Ohm/V.)
To release turn off the upstream main switch.
Circuit diagram on page 9/17

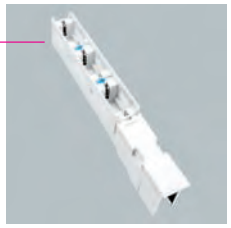

NH Bus-Mounting Fuse Block 690V~/440V- for fuses IEC 60269-2 / VDE 0636-2 size 00

100mm-System

3-pole
Up to 160A
Connection below and above.
Bus contact:
– for fixing to drilled busbars, M8 screw
– undrilled assembly clamp locks

Connection contacts:
– prism connection terminals Cu, Al* 16–70mm² s(r), s(s), f +AE
* Connections with aluminium conductors are not maintenance-free (see page 8/2).

SECUR®LeanStreamer, NH fuse block 690V~/440V- for fuses IEC 60269-2 / VDE 0636-2 size 1–2–3

185mm-System power

3-pole
Size 1 to 250A / size 2 to 400A / size 3 to 630A
For screwing onto drilled busbars.
Optional mounting on undrilled busbars.
Cable connections at bottom.
Shock protection.
Connection space covers.

Busbar contact with screws:
Screw M12.
drillless contact with clamp bracket.
busbars (10mm thick), profile bars.
Short-circuit capability up to 50kA with fuse links gL/gG.

SECUR®LeanStreamer, NH in-line fuse switch disconnector for fuses IEC 60269-2 / VDE 0636-2 size 1 – 2 – 3

VDE 0660 part 107/ EN 60947-3/ IEC 60947-3
1- and 3-pole switching
Mounting on a 185mm system power by screwing onto drilled busbars by screws M12
Optional mounting on undrilled busbars
Cable connections at top or bottom by turning switch base
Shock protection with integrated positive action closure and arc chambers,
has shock protection with lid open and in park position
Fuses retained mechanically in lid
Degree of protection (front side) IP 20 (1 pole switching) or IP 30 (3 pole switching),
degree of protection near terminal depends on installation
Test apertures in lid's self-closing terminal compartment
Connection space cover for shock protection and maintaining air and crawl areas

Conductor terminals:

Size	Screw terminal	Direct connection terminals Cu and Al*	V-direct connection terminals Cu and Al*	Clamp resp. prism connection	Clamp/prism clamping space for flat copper conductor Cu
1	M10 120mm²**	1 x 35–150mm² s(s) 1 x 50–185mm² sol(s) 1 x 35–70mm² s(r) 1 x 50mm² sol(r) Md 32–40Nm 2 x 35–150mm² s(s) 2 x 50–185mm² sol(s) 2 x 35–70mm² s(r) 2 x 35–50mm² sol(r) Md 18–24Nm	1 x 70–240mm² s(s) 1 x 95–300mm² sol(s) 1 x 50–185mm² s(r) 1 x 70–240mm² sol(r)	Cu 1 x 120–240mm² s(r), f + AE Cu, Al* 1 x 120–240mm² s(r), s(s), f, f + AE Cu 2 x 120–185mm² s(r), s(s), f, f + AE	21x(1–12)mm/ 21x(10–21)mm
2	M10 240mm²**	1 x 35–150mm² s(s) 1 x 50–185mm² sol(s) 1 x 35–70mm² s(r) 1 x 50mm² sol(r) Md 32–40Nm 2 x 35–150mm² s(s) 1 x 50–185mm² sol(s) 2 x 35–70mm² s(r) 2 x 35–50mm² sol(r) Md 18–24Nm	1 x 70–240mm² s(s) 1 x 95–300mm² sol(s) 1 x 50–185mm² s(r) 1 x 70–240mm² sol(r)	Cu 1 x 120–240mm² s(r), f + AE Cu, Al* 1 x 120–240mm² s(r), s(s), f, f + AE Cu 2 x 120–185mm² s(r), s(s), f, f + AE	21x(1–12)mm/ 21x(10–21)mm
3	M12 2 x 185mm²**	1 x 35–150mm² s(s) 1 x 50–185mm² sol(s) 1 x 35–70 mm² s(r) 1 x 50mm² sol(r) Md 32–40Nm 2 x 35–150mm² s(s) 1 x 50–185mm² sol(s) 2 x 35–70mm² s(r) 2 x 35–50mm² sol(r) Md 18–24Nm	1 x 120–240mm² s(s) 1 x 150–300mm² sol(s) 1 x 120–300mm² s(r)	Cu 1 x 120–240mm² s(r), f + AE Cu, Al* 1 x 120–240mm² s(r), s(s), f, f + AE Cu 2 x 120–185mm² s(r), s(s), f, f + AE	21x(1–12)mm/ 21x(10–21)mm

* not maintenance-free when aluminium conductors are used (see page 8/2)
** copper conductor for associated rated currents in compliance with IEC/EN 60947-1

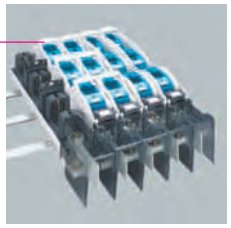

Size	1	2	3
Type of current	AC (50–60Hz)	AC (50–60Hz)	AC (50–60Hz)
Rated operating voltage (U_e)**	690V AC	690V AC	690V AC
Rated insulation voltage (U_i)**	1000V	1000V	1000V
Rated surge withstand capacity (U_{imp}) without fuse monitoring**	8kV****	8kV****	8kV****
Rated operating current (I_e)*	250A	400A	630A
Utilisation categories without fuse monitoring**	AC-23B (500V) AC-22B (690V) AC-21B (690V)	AC-23B (500V) AC-22B (690V) AC-21B (690V)	AC-23B (500V) AC-22B (690V) AC-21B (690V)
Conditional rated short-circuit current, 3-pole switching***	100kA	100kA	100kA
Conditional rated short-circuit current, 1-pole switching***	50kA	50kA	50kA
For NH-fuses VDE 0636-2 with power dissipation per phase to	23W	34W	48W

* For continuous operation of multiple devices next to one another, observe the rated load factor as specified in VDE 0660 Part 500/IEC/EN 60439-1, Table 1 and IEC/EN 61439-2, Table 101.
For AC-23B, the distance to earthed parts must be at least 100mm at the top and 50mm at the side.

** Fuse monitoring U_e, U_i 400V AC, U_{imp} 4kV, level of soiling: 2 (mains connections)

*** Type tested with fuses of characteristic gL/gG.

**** 12kV screw M12, drilled busbar

Size 3 double NH in-line fuse switch disconnector 1250A
3-pole, 690V AC, 2 x 630A, 3-pole switching, short-circuit withstand capacity up to 100kA with fuses gL/gG, utilisation categories AC20B (690V)
Conductor terminals: each with four screw-type terminals M12 to 240mm²

Electronic fuse monitoring:
2 LEDs
2 changeover switches
2 x Cu 2.5mm² solid conductors, DIN 46 288 or 2 x Cu 1.5mm² stranded conductors with sleeves, DIN 46 228-1/-2/-3
The internal resistance of the measuring needle lies above the MOhm level and thereby meets VDE requirements regarding contact voltage (>1000 Ohm/V.)
To release turn off the upstream main switch.
Circuit diagram on page 9/17

Pilot switch for lid position indication:
3 (changeover) switches can be used for sizes 1, 2, 3
Rated operating voltage (rated operating current) 250V AC (5A), 30V DC (4A)

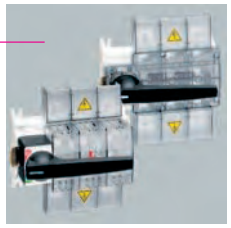

CAPUS®EasyUse switch disconnectors sizes 250A – 400A – 630A – 800A
CAPUS®PowerFuse switch disconnectors with fuses for NH-fuses
IEC 60269-2 / VDE 0636-2 size 00 – 1 – 2 – 3

VDE 0660 part 107 / EN 60947-3 / IEC 60947-3
screwing onto mounting plate
3-pole switching, double-breaking main contacts
operator-independent switching; visible air gap
Front shock protection with terminal cover

CAPUS®EasyUse IP40 degree of protection (front side)
CAPUS®PowerFuse IP20 degree of protection (front side)
Degree of protection near terminal depends on installation
voltage-free fuse replacement

Conductor terminals:

Size	Screw terminal	Clamp-type terminal	Terminal space	Wedge-type terminal Cu and Al*	Other terminals Cu
LTS-250	M10	fl. Cu	14 x 1–9	70–120mm² s(r), f, f + AE**	
LTS-400	M10	fl. Cu	18 x 1–10	70–150mm² s(r), f, f + AE** Md 6–8Nm	double-wedge terminal 2 x 70–120mm² s(r), f, f + AE**
LTS-630	M10	fl. Cu	21 x 1–13	120–240mm² s(r), f, f + AE**	double-wedge terminal 2 x 120–185mm² s(r), f, f + AE**
LTS-800	M12	fl. Cu	25 x 1–13	150–300mm² s(r), f, f + AE**	double-wedge terminal 2 x 150–240mm² s(r), f, f + AE**
LTS-F160	M8 Md 14Nm +/– 10%	Cu 2.5–70mm² s(r), f, fl. Cu Md 3Nm	12 x 1–10		
LTS-F250	M10	fl. Cu	18 x 1–10	70–150mm² s(r), f, f + AE**	double-wedge terminal 2 x 70–120mm² s(r), f, f + AE**
LTS-F400	M10	fl. Cu	21 x 1–13	120–240mm² s(r), f, f + AE**	double-wedge terminal 2 x 120–185mm² s(r), f, f + AE**
LTS-F630	M12	fl. Cu	25 x 1–13	150–300mm² s(r), f, f + AE**	double-wedge terminal 2 x 150–240mm² s(r), f, f + AE**

* Not maintenance-free when aluminium conductors are used (see page 8/2).
** Reducing the maximum conductor cross-sections may be required

Covers for door and permanent mounting
not lockable, IP 64 degree of protection.
Triple lockable, degree of protection IP54.

Pilot switch for switch position indicator
Rated operating voltage (rated operating current) 250V AC (4A), 400V AC (3A)

CAPUS® EasyUse

Switch Disconnectors, 3-pole switching

Size	250A	400A	630A	800A
Type of current	AC (50–60Hz)	AC (50–60Hz)	AC (50–60Hz)	AC (50–60Hz)
Max. rated voltage (U_e)	500V AC	500V AC	500V AC	500V AC
Rated insulation voltage (U_i)	1000V	1000V	1000V	1000V
Rated surge withstand capacity (U_{imp})	12kV	12kV	12kV	12kV
Conv. therm. current in the case (I_{the}) horizontal installation (side-by-side pole)* vertical installation (vertical pole)**	 250A 250A	 400A 400A	 630A 630A	 800A 800A
Max. rated operating current (I_e)*	250A	400A	630A	800A
Utilisation categories	AC-23 A (500V, 200A) AC-23 B (415V) AC-22 B (500V) AC-21 B (500V)	AC-23 B (500V) AC-22 B (500V) AC-21 B (500V)	AC-23 B (500V) AC-22 B (500V) AC-21 B (500V)	AC-23 B (500V) AC-22 B (500V) AC-21 B (500V)
Mechanical durability (switch clearance)	7000	7000	7000	2500
Rated short circuit making capacity (I_{cm})	20kA	30kA	30kA	40kA
Short-circuit withstand capacity (I_{cw})	7kA – 1s	15kA – 1s	15kA – 1s	20kA – 1s
Conditional rated short-circuit current with gG fuses	80/50kA size 1 – 200/250A – 500V	80kA size 3 – 630A – 500V	80kA size 3 – 630A – 500V	50kA size 4 – 800A – 500V

* Metal casing, interior dimensions HxW x D [mm]: LTS-250 (encapsulated) 252 x 378 x 302, LTS-400 (encapsulated) 504 x 378 x 302, LTS-630 (ventilated) 504 x 378 x 302, LTS-800 (ventilated) 756 x 378 x 428

** Metal casing, dimensions [mm]: LTS-250 (encapsulated) 300 x 400 x 200, LTS-400 (encapsulated) 500 x 500 x 300, LTS-630 (encapsulated) 500 x 500 x 300, LTS-800 (encapsulated) 600 x 600 x 400

*** For continuous operation of multiple devices next to one another, observe the rated load factor as specified in VDE 0660 Part 500/IEC/EN 60439-1, Table 1 and IEC/EN 61439-2, Table 101.

CAPUS® PowerFuse

Switch Disconnectors with fuses, 3-pole switching

Size	160A	250A	400A	630A
Fuse size	NH 00	NH 1	NH 2	NH 3
Type of current	AC (50–60Hz)	AC (50–60Hz)	AC (50–60Hz)	AC (50–60Hz)
Max. rated voltage (U_e)	690V AC	690V AC	690V AC	690V AC
Rated insulation voltage (U_i)	1000V	1000V	1000V	1000V
Rated surge withstand capacity (U_{imp})	8kV	8kV	8kV	12kV
Conv. therm. current in the case (I_{the}) horizontal installation (side-by-side pole)* vertical installation (vertical pole)**	 160A 145A	 250A 250A	 400A 315A	 630A 470A
Max. rated operating current (I_e)*	160A	250A	400A	630A
Utilisation categories	AC-23 A (690V, 125A) AC-23 A (500V) AC-22 A (690V) AC-21 A (690V)	AC-23 B (690V) AC-22 B (690V) AC-21 B (690V)	AC-23 B (690V) AC-22 B (690V) AC-21 B (690V)	AC-23 B (690V) AC-22 B (690V) AC-21 B (690V)
Mechanical durability (switch clearance)	7000	7000	7000	4000
Conditional rated short-circuit current with gG fuses	80kA size 00 – 160A – 690V	80kA size 1 – 250A – 690V	80kA size 2 – 400A – 690V	80kA size 3 – 630A – 690V
For NH fuses VDE 0636-201 with power dissipation per phase to	12W	23W	34W	48W

* Metal casing, interior dimensions HxW x D [mm]: LTS-F160 (encapsulated) 252 x 378 x 302, LTS-F250 (encapsulated) 504 x 378 x 302, LTS-F400 (ventilated) 504 x 378 x 302, LTS-F630 (ventilated) 756 x 378 x 428

** Metal casing, dimensions [mm]: LTS-F160 (encapsulated) 500 x 500 x 300, LTS-F250 (encapsulated) 500 x 500 x 300, LTS-F400 (encapsulated) 500 x 500 x 300, LTS-F630 (encapsulated) 600 x 600 x 400

*** For continuous operation of multiple devices next to one another, observe the rated load factor as specified in VDE 0660 Part 500/IEC/EN 60439-1, Table 1 and IEC/EN 61439-2, Table 101.

Short-circuit strength diagrams according to IEC/EN 60439-1 (resp. IEC/EN 61439-1/2) for 60, 100 and 185mm-busbar systems

(●) Measured values from type tests

Busbar support 01 272
60mm-System compact

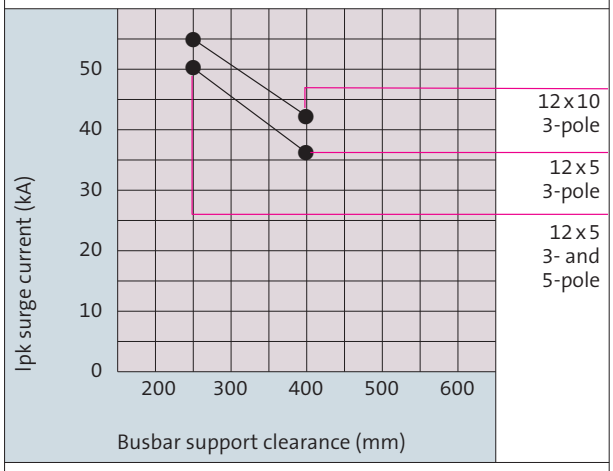

Busbar support 01 495 / 01 500 / 01 315 / 01 316
60mm-System classic

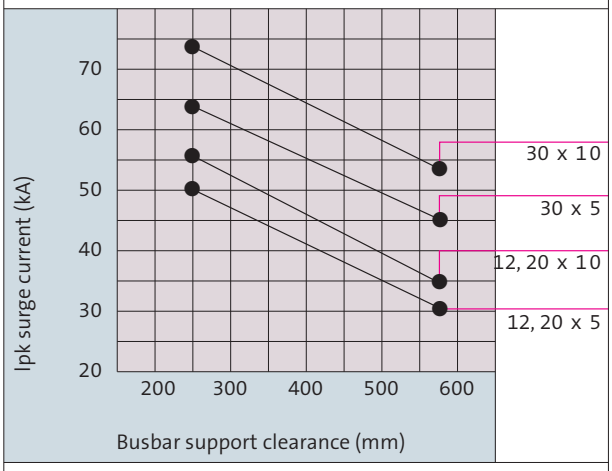

Busbar support 01 231/01 116, 3 and 4 pole
60mm-System classic 1250A / 1600A

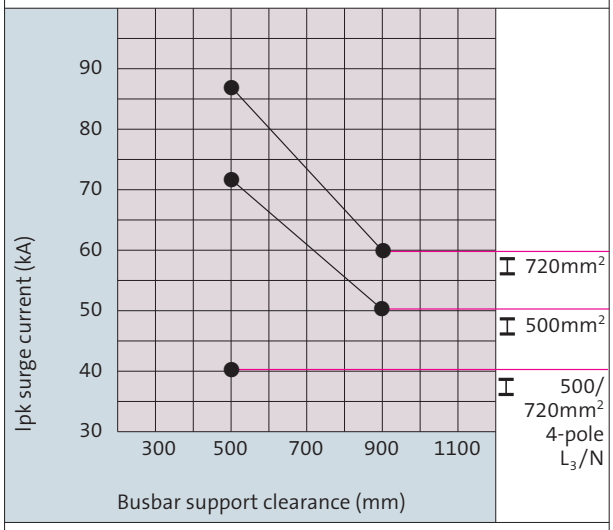

Busbar support 01 232/01 132
60mm-System classic 2500A

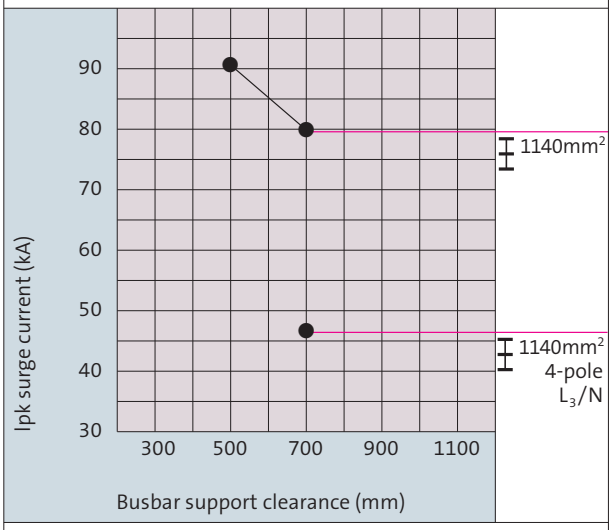

Busbar support 01 479
100mm-System

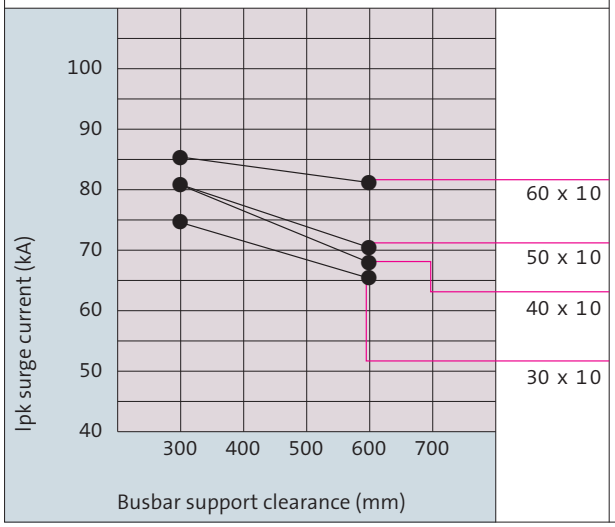

Busbar support 01 742
185mm-System power

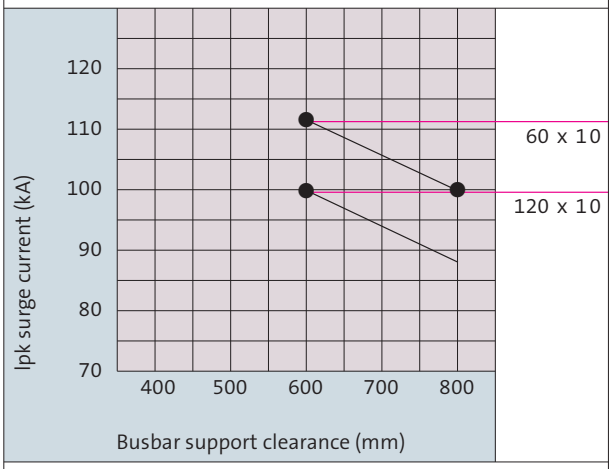

Short-circuit strength diagrams according to IEC/EN 60439-1 (resp. IEC/EN 61439-1/2) for 185mm busbar systems and centre-feed unit

(●) Measured values from type tests

Busbar support 01 230
185mm-System power

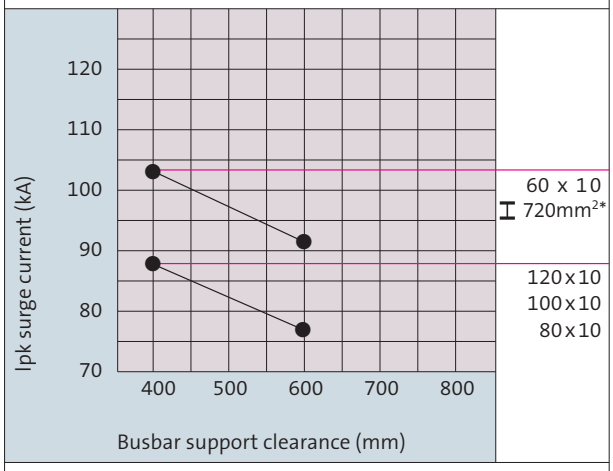

* mounted with at least one NH in-line fuse switch disconnector size 1/2/3

Centre-feed unit
Current flow through 80 % of busbar length

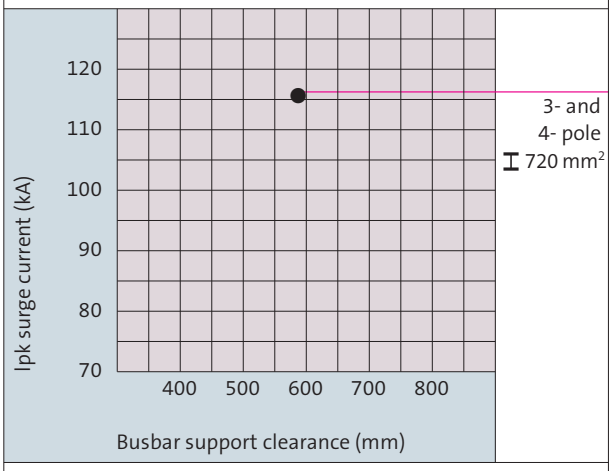

Short-circuit strength diagrams according to UL 845 for 60mm busbar systems

(●) Measured values from type tests

Busbar support 01 508

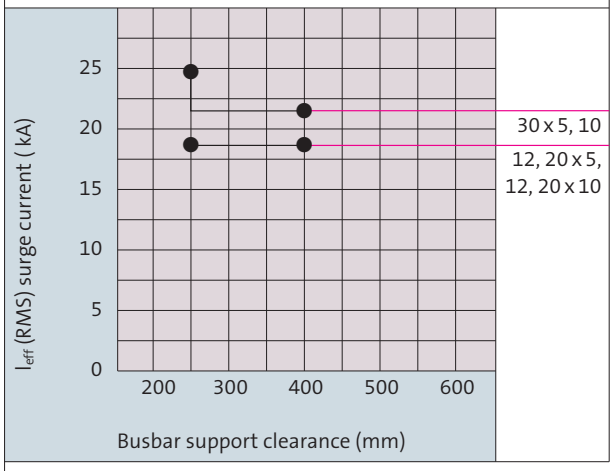

Busbar support 01 231 / 01 232

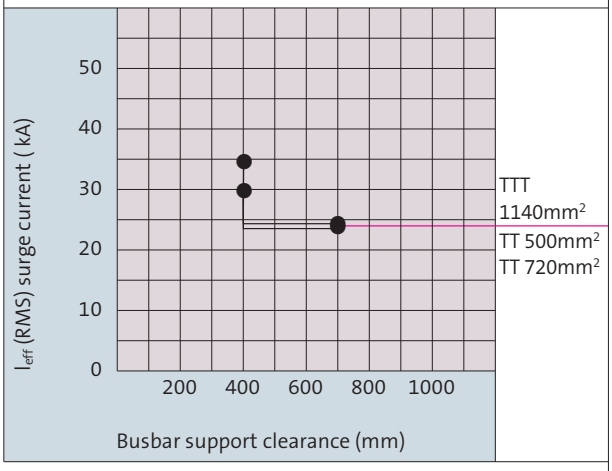

Overview of the applicability of Wöhner products in terms of operating voltage

(only the conditions according to IEC standards are taken into consideration)

All specifications apply for overvoltage category III in accordance with IEC 60439-1 or IEC 61439-1
The applicability for other overvoltage categories can be derived from the rated surge withstand capacity U_{imp}.

The following clearances must be maintained:

Rated surge withstand capacity U_{imp}	**Minimum clearance**
4kV	3.0mm
6kV	5.5mm
8kV	8.0mm
12kV	14mm

All specifications apply for level of soiling 3 in accordance with IEC 60439-1 or IEC 61439-1
(Wöhner uses insulating parts made from materials in material class IIIa).

The following creepage distances must be maintained:

Rated insulation voltage U_i	**Creepage distance**
400V AC / DC	6.3mm
500V AC / DC	8.0mm
690V AC / DC	10.0mm
800V AC / DC	12.5mm
1000V AC / DC	16.0mm
1250V DC	20.0mm
1500V DC	25.0mm

The values shown in the table below apply for the Wöhner items themselves.
The user is responsible for maintaining the proper clearances and creepage distances, taking the installation conditions into account.
The maximum permitted power dissipation of the fuse links must be taken into account with components having fuses.
Short circuit data for DC applications is available upon request.

Values for selected items with regard to insulation coordination

Part no.	Rated operating voltage U_e (V)		Rated surge capacity U_{imp} (kV)	Rated operating current I_e (A)	Maximum permitted operating voltage (V)		Note
	AC	DC			AC	DC	
01 008	690			2000	800	800	2)
01 047	690			630	1000	1500	2)
01 068	690			150	1000	1500	2)
01 069	690			1600	800	800	2)
01 070	690			1600	800	800	2)
01 071	690			1600	800	800	2)
01 092	690			630	1000	1500	2)
01 094	690			630	1000	1500	2)
01 135	690			300	1000	1500	2)
01 141	690			630	1000	1000	2)
01 145	690			1600	1000	1000	2)
01 147	690		6	560	800	800	
01 162	690		6	630	800	800	
01 165	690		6	300	800	800	
01 166	690			630	1000	1000	2)
01 185	690			1600	800	800	2)
01 186	690			2500	800	800	2)
01 193	690			630	1000	1000	2)

1) The value for the maximum permitted operating voltage of fuse combination units in accordance with IEC 60947-3 is only valid when the device is used as a fuse holder **without a load-switching function**.
2) Due to the insulating characteristics, the use of single-pole devices is determined exclusively by the installation conditions.

Part no.	Rated operating voltage U_e (V)		Rated surge capacity U_{imp} (kV)	Rated operating current I_e (A)	Maximum permitted operating voltage (V)		Note
	AC	DC			AC	DC	
01 203	690			250	1000	1500	2)
01 230	690		8		1000	1500	
01 231	690		8		1000	1500	
01 232	690		8		1000	1500	
01 240	690		6	160	800	800	
01 243	690		6	250	800	800	
01 272	690		6		1000	1500	
01 274	690			2500	800	800	2)
01 275	690			2500	800	800	2)
01 284	690			80	1000	1500	2)
01 285	690			100	1000	1500	2)
01 287	690			160	1000	1500	2)
01 289	690			80	1000	1500	2)
01 290	690			100	1000	1500	2)
01 292	690			160	1000	1500	2)
01 318	690			360	1000	1500	2)
01 319	690			360	1000	1500	2)
01 356	690	750	6		1000	1500	
01 484	690		6		1000	1500	
01 485	690		8		1000	1500	
01 495	690		8		1000	1500	
01 498	400	250	6	63	500	250	
01 500	690		8		1000	1500	
01 508	690		8		1000	1500	
01 512	690			360	1000	1500	2)
01 513	690			1600	800	800	2)
01 514	690			490	1000	1500	2)
01 537	690		6	560	800	800	
01 538	690		6	630	800	800	
01 563	690		6	80	1000	1000	
01 601	690		6		1000	1500	2)
01 602	690	1000	6		1000	1000	
01 647	400	250	6	63	500	250	
01 747	690			360	1000	1500	2)
01 748	690			490	1000	1500	2)
01 749	690			630	1000	1500	2)
01 753	690		6	630	800	800	
01 754	690		6	560	800	800	
01 759	690			630	1000	1500	2)
01 760	690			600	1000	1500	2)
01 823	690			630	1000	1000	2)
01 827	690			1600	1000	1000	2)
01 829	690			1600	1000	1000	2)
01 876	690		6		1000	1500	2)
01 886	690			630	1000	1000	2)
01 906	690			1600	800	800	2)
01 907	690			1600	800	800	2)
01 911	690			1600	800	800	2)
01 934	690			1600	800	800	2)
01 935	690			1600	800	800	2)
01 936	690			1600	800	800	2)
01 990	690			630	1000	1000	2)
02 603	400		6		690		
02 604	400		6		690		
02 605	400		6		690		

1) The value for the maximum permitted operating voltage of fuse combination units in accordance with IEC 60947-3 is only valid when the device is used as a fuse holder **without a load-switching function**.
2) Due to the insulating characteristics, the use of single-pole devices is determined exclusively by the installation conditions.

Part no.	Rated operating voltage U_e (V)		Rated surge capacity U_{imp} (kV)	Rated operating current I_e (A)	Maximum permitted operating voltage (V)		Note
	AC	DC			AC	DC	
02 606	400		6		690		
02 607	400		6		690		
02 615	400		6		690		
03 199	690	440	6	160	800	800	
03 299	690	440	6	160	800	800	
03 350	690	440	6	160	1000	1000	2)
03 351	690	440	6	160	800	800	
03 354	690	440	6	160	1000	1000	2)
03 355	690	440	6	160	800	800	
03 369	690	440	6	160	1000	1000	2)
03 370	690	440	6	160	1000	1000	2)
03 654	690	440	6	160	800	800	
03 656	690	440	6	160	800	800	
03 693	690	440	6	400	800	800	
03 704	690	440	6	250	800	800	
03 758	690	440	6	160	1000	1000	2)
03 759	690	440	6	160	800	800	
03 760	690	440	6	160	1000	1000	2)
03 761	690	440	6	160	800	800	
03 762	690	440	6	250	1000	1000	2)
03 763	690	440	6	250	800	800	
03 764	690	440	6	250	1000	1000	2)
03 765	690	440	6	250	800	800	
03 766	690	440	6	400	1000	1000	2)
03 767	690	440	6	400	800	800	
03 768	690	440	6	630	1000	1000	2)
03 769	690	440	6	630	800	800	
05 779	600	600			600	600	2)
05 780	1500	1500			1500	1500	2)
05 781	1500	1500			1500	1500	2)
05 782	1500	1500			1500	1500	2)
05 783	2000	2000			2000	2000	2)
05 784	2000	2000			2000	2000	2)
05 785	2000	2000			2000	2000	2)
05 786	2000	2000			2000	2000	2)
05 787	2000	2000			2000	2000	2)
05 788	3000	3000			3000	3000	2)
05 789	3000	3000			3000	3000	2)
05 790	2000	2000			2000	2000	2)
05 791	2000	2000			2000	2000	2)
05 792	1500	1500			1500	1500	2)
05 800	1500	1500			1500	1500	2)
05 801	1500	1500			1500	1500	2)
05 802	1500	1500			1500	1500	2)
31 014	400		4	80	1000	1000	
31 057	400		4	130	1000	1000	
31 101	400		4	80	1000	1000	
31 110	690	440	6	32	800	800	1)
31 111	690		6	32	800	800	1)
31 112	690	440	6	32	800	800	1)
31 113	690		6	32	800	800	1)
31 114	690		6	32	800	800	1)
31 115	690	440	6	50	800	800	1)
31 116	690		6	50	800	800	1)
31 117	690	440	6	50	800	800	1)

1) The value for the maximum permitted operating voltage of fuse combination units in accordance with IEC 60947-3 is only valid when the device is used as a fuse holder **without a load-switching function**.
2) Due to the insulating characteristics, the use of single-pole devices is determined exclusively by the installation conditions.

Part no.	Rated operating voltage U_e (V)		Rated surge capacity U_{imp} (kV)	Rated operating current I_e (A)	Maximum permitted operating voltage (V)		Note
	AC	DC			AC	DC	
31 118	690		6	50	800	800	1)
31 119	690		6	50	800	800	1)
31 120	690	440	6	125	800	800	1)
31 121	690		6	125	800	800	1)
31 122	690	440	6	125	800	800	1)
31 123	690		6	125	800	800	1)
31 124	690		6	125	800	800	1)
31 130	690	440	6	32	700	800	1)
31 132	690	440	6	32	700	800	1)
31 133	690		6	32	700	800	1)
31 135	690	440	6	50	700	800	1)
31 138	690		6	50	700	800	1)
31 140	690	440	6	125	700	800	1)
31 143	690		6	125	700	800	1)
31 158	400	110	6	63	800	110	1)
31 168	690		6	50	800	800	1)
31 171	690		6	125	800	800	1)
31 173	500	500	6	25	500	500	
31 174	500	500	6	25	500		
31 175	500	500	6	63	500	500	
31 176	500	500	6	63	500		
31 232	690	110	6	32	800	110	1)
31 275	690	440	6	32	800	800	1)
31 276	690	440	6	32	800	800	1)
31 277	690		6	32	800	800	1)
31 278	690	440	6	50	800	800	1)
31 279	690		6	50	800	800	1)
31 280	690		6	50	800	800	1)
31 281	690	440	6	125	800	800	1)
31 282	690	440	6	125	800	800	1)
31 283	690		6	125	800	800	1)
31 286	400	250	6	16	400	250	
31 288	400	250	6	16	400		
31 291	400	250	6	63	400	250	
31 293	400	250	6	63	400		
31 301	400	250	6	16	400	250	
31 302	400	250	6	16	400		
31 303	400	250	6	63	400	250	
31 306	400	250	6	63	400		
31 307	400	65	6	63	500	500	1)
31 308	400		6	63	500		1)
31 309	400		4	80	1000	1000	
31 311	400		4	80	1000	1000	
31 313	400	130	6	63	500	500	1)
31 314	400		6	63	500		1)
31 315	400		6	63	500		1)
31 441	500	500	6	25	690	500	
31 442	500	500	6	63	690	500	
31 525	400	110	6	62	700	110	1)
31 548	690		4	100	1000	1500	
31 549	690		4	100	690		
31 555		1250	6	25		1500	
31 918	500	500	6	25	690	500	
31 919	500	500	6	63	690	500	
31 930	72	72	6	32	800	800	1)

1) The value for the maximum permitted operating voltage of fuse combination units in accordance with IEC 60947-3 is only valid when the device is used as a fuse holder **without a load-switching function**.
2) Due to the insulating characteristics, the use of single-pole devices is determined exclusively by the installation conditions.

Part no.	Rated operating voltage U_e (V)		Rated surge capacity U_{imp} (kV)	Rated operating current I_e (A)	Maximum permitted operating voltage (V)		Note
	AC	DC			AC	DC	
31 935	400	250	6	63	500	250	
31 936	400	250	6	63	500	250	
31 940	690	440	6	50	800	800	1)
31 941	690		6	50	800	800	1)
31 942	690	440	6	125	800	800	1)
31 943	690		6	125	800	800	1)
31 946	500	500	6	25	690	500	
31 947	500	500	6	63	690	500	
31 950	500	500	6	25	690	500	
31 951	500	500	6	63	690	500	
31 954	690	800	6	32	800	800	
31 955	690	700	6	32	700	700	
31 956	690	700	6	32	700	700	
31 957	690	440	6	125	800	800	1)
31 958	600		6	30	600		
31 959	600		6	30	600		
31 960	1000	1000	6	32	1000	1000	
31 961	690	800	6	32	700	800	
31 962	690	700	6	32	700	700	
31 971		1000	6	32		1000	
31 972	690	440	6	50	800	800	1)
31 973		1000	6	32	1000	1000	
32 004	690		6	630	800	800	
32 137	690		6	250	690		
32 138	690		6	600	690		
32 140	690		6	250	690		
32 148	690		6	520	690		
32 154	690		6	300	690		
32 156	690		6	250	690		
32 157	690		6	570	690		
32 168	690		6	250	800	800	
32 170	690		6	550	690		
32 214	690		6	200	800	800	
32 215	690		6	200	800	800	
32 216	690		6	250	800	800	
32 226	400		6	100	400		
32 400	690		6	25	800		
32 401	690		6	25	800		
32 402	690		6	25	800		
32 404	690		6	32	800		
32 408	690		6	32	800		
32 412	690		6	45	800		
32 416	690		6	45	800		
32 420	690		6		800	800	
32 421	690		6		800	800	
32 425	690		6		800	800	
32 426	690		6		800	800	
32 427	690		6	32	800		
32 428	690		6	32	800		
32 429	690		6	16	800		
32 430	690		6	25	800		
32 431	690		6	25	800		
32 432	690		6	25	800		
32 433	690		6	25	800		
32 434	690		6	32	800		

1) The value for the maximum permitted operating voltage of fuse combination units in accordance with IEC 60947-3 is only valid when the device is used as a fuse holder **without a load-switching function**.
2) Due to the insulating characteristics, the use of single-pole devices is determined exclusively by the installation conditions.

Part no.	Rated operating voltage U_e (V)		Rated surge capacity U_{imp} (kV)	Rated operating current I_e (A)	Maximum permitted operating voltage (V)		Note
	AC	DC			AC	DC	
32 436	690		6	25	800	800	
32 438	690		6	32	800		
32 439	690		6	25	800	800	
32 440	690		6	16	800		
32 441	690		6	32	800		
32 442	690		6	32	800		
32 443	690		6	32	800		
32 444	690		6	32	800		
32 445	690		6	25	800		
32 446	690		6	32	800		
32 448	690		6	25	800		
32 449	690		6	32	800		
32 450	690		6	25	800		
32 451	690		6	32	800		
32 452	690		6	25	800		
32 453	690		6	32	800		
32 454	690		6	63	800		
32 455	690		6	63	800		
32 456	690		6	63	800		
32 457	690		6	63	800		
32 459	690		6	63	800		
32 460	690		6	63	800		
32 461	690		6	63	800		
32 463	690		6	63	800		
32 464	690		6	80	800	800	
32 465	690		6	80	800	800	
32 466	690		6	80	800	800	
32 467	690		6	80	800	800	
32 469	690		6	80	800	800	
32 472	690		6	80	800	800	
32 477	690		6		800	800	
32 478	690		6		800	800	
32 484	690		6		800	800	
32 485	690		6		800	800	
32 533	690		6	25	800		
32 534	690		6	25	800		
32 535	690		6	63	800		
32 549	690		6	160	690		
32 570	690		6	160	690		
32 575	690		6	160	690		
32 578	690		6	250	690		
32 579	690		6	500	690		
32 580	690		6	250	690		
32 581	690		6	500	690		
32 582	690		6	250	690		
32 583	690		6	500	690		
32 584	690		6	250	690		
32 585	690		6	500	690		
32 592	690		6	250	690		
32 975	690		6	400	690		
32 976	690		6	160	690		
32 977	690		6	250	690		
32 980	690		6	580	690		
33 093	690		8	250	1000	1000	1)
33 094	690		8	400	1000	1000	1)

1) The value for the maximum permitted operating voltage of fuse combination units in accordance with IEC 60947-3 is only valid when the device is used as a fuse holder **without a load-switching function**.
2) Due to the insulating characteristics, the use of single-pole devices is determined exclusively by the installation conditions.

Part no.	Rated operating voltage U_e (V)		Rated surge capacity U_{imp} (kV)	Rated operating current I_e (A)	Maximum permitted operating voltage (V)		Note
	AC	DC			AC	DC	
33 095	690		8	630	1000	1000	1)
33 097	690		8	250	1000	1000	1)
33 098	690		8	400	1000	1000	1)
33 099	690		8	630	1000	1000	1)
33 198	690	440	6	160	800	800	1)
33 199	690	440	6	160	800	800	1)
33 200	690	440	6	160	800	800	1)
33 201	690	440	6	250	800	800	1)
33 202	690	440	6	400	800	800	1)
33 203	690	440	6	630	800	800	1)
33 216	690	440	6	125	800	800	1)
33 217	690	440	6	125	800	800	1)
33 221	690	440	6	160	800	800	1)
33 222	690	440	6	160	800	800	1)
33 234	690		8	160	1000	1000	1)
33 235	690		8	160	1000	1000	1)
33 243	690		8	250	1000	1000	1)
33244	690		8	400	1000	1000	1)
33 245	690		8	630	1000	1000	1)
33 321	690		8	1250	1000	1000	1)
33 398	690	440	6	160	800	800	1)
33 416	690	440	6	160	800	800	1)
33 601	690	440	6	250	800	800	1)
33 602	690	440	6	400	800	800	1)
33 603	690	440	6	630	800	800	1)

1) The value for the maximum permitted operating voltage of fuse combination units in accordance with IEC 60947-3 is only valid when the device is used as a fuse holder **without a load-switching function**.
2) Due to the insulating characteristics, the use of single-pole devices is determined exclusively by the installation conditions.

Part no.	Type no.	USA	Canada	Germ. Lloyd	Germany	Netherlands	China
01 008	HH64.2	℞*	●				○
01 025	C025-L	●*	●	●			○
01 026	C026-L	●*	●	●			○
01 027	3 x 20 x 1	℞					
01 028	6 x 20 x 1	℞					
01 029	10 x 20 x 1	℞					
01 035	6 x 15.5 x 0.8	℞					
01 047	520			●			○
01 050	6 x 13 x 0.5	℞					
01 054	3 x 9 x 0.8	℞					
01 060	5 x 50 x 1	℞					
01 061	10 x 80 x 1	℞					
01 062	3 x 20 x 1	℞					
01 063	6 x 20 x 1	℞					
01 064	10 x 20 x 1	℞					
01 068	524	℞	●	●			○
01 069	CPC50	℞*					○
01 070	CPC63	℞*					○
01 071	CPC100	℞*					○
01 075	5 x 24 x 1	℞					
01 076	10 x 24 x 1	℞					
01 083	3 x 9 x 0.8	℞					
01 084	6 x 9 x 0.8	℞					
01 089	4 x 15.5 x 0.8	℞					
01 090	6 x 15.5 x 0.8	℞					
01 091	10 x 15.5 x 0.8	℞					
01 092				●			○
01 094				●			○
01 095	5 x 32 x 1	℞					
01 096	10 x 32 x 1	℞					
01 097	5 x 40 x 1	℞					
01 099	10 x 40 x 1	℞					
01 112	5 x 50 x 1	℞					
01 113	10 x 50 x 1	℞					
01 123	10 x 63 x 1	℞					
01 131	511	℞	●	●			○
01 135	515	●*					○
01 136	TC60-L	●*	●	●			○
01 137	TC60-L	●*	●	●			○
01 140	20 x 10-L	●*	●	●			○
01 141				●			○
01 145							○
01 146	6 x 13 x 0.5	℞					
01 147	M300	℞*	●	●			○
01 162	M3210	℞*	●	●			○
01 165	M150	●*					○
01 166				●			○
01 184	10 x 24 x 1	℞					
01 185	H41.2	℞*	●	●			○
01 186	HH101.2	℞*	●				○

Part no.	Type no.	USA	Canada	Germ. Lloyd	Germany	Netherlands	China
01 187	HH1140-L	●*	●				○
01 190	H720-L	●*	●	●			○
01 193							○
01 194	6 x 9 x 0.8	℞					
01 196	4 x 15.5 x 0.8	℞					
01 203	528	℞	●	●			○
01 204	30 x 10-L	●*	●	●			○
01 223	H500-L	●*	●	●			○
01 224	H500-L	●*	●	●			○
01 227	HH1140-L	●*	●				○
01 229	H720-L	●*	●	●			○
01 230							○
01 231	S630-L	●*	●	●			○
01 232	S640-L	●*	●				○
01 234	234-L	●*	●	●			○
01 240	240-L	●*	●	●			○
01 243	243-L	●*	●	●			○
01 244	C30 x 5-L	●*	●	●			○
01 245	C30 x 10-L	●*	●	●			○
01 249	H720-L	●*	●	●			○
01 250	H500-L	●*	●	●			○
01 252	CHH-L	●*	●	●			○
01 253	4 x 24 x 1	℞					
01 255	6 x 24 x 1	℞					
01 256	6 x 40 x 1	℞					
01 272	S612	●*					○
01 273	10 x 100 x 1	℞					
01 274							○
01 275							○
01 284	521	℞	●	●			○
01 285	522	℞	●	●			○
01 287	523	℞	●	●			○
01 289	525	℞	●	●			○
01 290	526	℞	●	●			○
01 292	527	℞	●	●			○
01 300	240	℞*	●	●			○
01 301	243	℞*	●	●			○
01 318	518	℞	●	●			○
01 319	519	℞	●	●			○
01 322	4 x 13 x 0.5	℞					
01 323	8 x 24 x 1	℞					
01 324	5 x 63 x 1	℞					
01 343	8 x 50 x 1	℞					
01 356	S356	⌛					
01 413	412	℞	●	●			○
01 484	484	℞	●				○
01 485	485	℞	●	●			○
01 495	S610	℞	●	●			○
01 498	5683			●	●		
01 500	S610	℞	●	●			○

● approved
℞ UL Recognized
* for feeder circuits approved according to UL 508A up to 600V
⌛ waiting approval at editorial deadline
○ no certification required

Part no.	Type no.	USA	Canada	Germ. Lloyd	Germany	Netherlands	China
01 508	S620-L	● *	●	●			○
01 509	10 x 50 x 1	℞					
01 510	10 x 63 x 1	℞					
01 512				●			○
01 513	HH41.2	℞ *	●				○
01 514				●			○
01 515	B620-L	● *	●	●			○
01 518	B620-L	● *	●	●			○
01 537	M300-L	● *	●	●			○
01 538	M3210	℞ *	●	●			○
01 539	CTC60-L	● *	●	●			○
01 540	CTC60-L	● *	●	●			○
01 554	C60.1-L	● *	●	●			○
01 555	C60.2-L	● *	●	●			○
01 563	CPL16-L	● *					○
01 573	511-L	● *	●	●			○
01 583	10 x 15.5 x 0.8	℞					
01 590	502	℞	●	●			○
01 596	CTC60-L	● *	●	●			○
01 597	CTC60-L	● *	●	●			○
01 599	C60.1-L	● *	●	●			○
01 601	S489	℞		●			○
01 608	H720-L	● *	●	●			○
01 609	H500-L	● *	●	●			○
01 611	5 x 24 x 1	℞					
01 612	5 x 32 x 1	℞					
01 613	10 x 32 x 1	℞					
01 614	5 x 40 x 1	℞					
01 615	10 x 40 x 1	℞					
01 618	12 x 5-L	● *	●	●			○
01 619	15 x 5			●			○
01 620	20 x 5-L	● *	●	●			○
01 621	25 x 5			●			○
01 622	30 x 5-L	● *	●	●			○
01 623	12 x 10-L	● *	●	●			○
01 624	20 x 10-L	● *	●	●			○
01 625	30 x 10-L	● *	●	●			○
01 626							○
01 627							○
01 628							○
01 647	5683			●	●		
01 747				●			○
01 748				●			○
01 749				●			○
01 753				●			○
01 754	413	℞	●	●			○
01 756	512-L	● *	●	●			○
01 757	513-L	● *	●	●			○
01 759	530	℞	●	●			○
01 760	529	℞	●	●			○

Part no.	Type no.	USA	Canada	Germ. Lloyd	Germany	Netherlands	China
01 765							○
01 766							○
01 767							○
01 823				●			○
01 827							○
01 829							○
01 876	876	℞ *		●			○
01 886				●			○
01 906	H51.1	℞ *	●	●			○
01 907	H64.1	℞ *	●	●			○
01 911	H64.2	℞ *	●	●			○
01 934	H81.2	℞ *	●	●			○
01 935	H101.2	℞ *	●	●			○
01 936	H51.2	℞ *	●	●			○
01 990				●			○
02 603					●		○
02 604					●		○
02 605					●		○
02 606					●		○
02 607					●		○
02 615					●		○
03 199	NH-00				●		
03 214			●				
03 215			●				
03 216			●				
03 217			●				
03 218			●				
03 219			●				
03 220			●				
03 221			●				
03 222			●				
03 223			●				
03 224			●				
03 225			●				
03 226			●				
03 227			●				
03 228			●				
03 229			●				
03 230			●				
03 231			●				
03 232			●				
03 234			●				
03 235			●				
03 236			●				
03 237			●				
03 238			●				
03 239			●				
03 240			●				
03 241			●				
03 299	NH-00				●		

● approved
℞ UL Recognized
* for feeder circuits approved according to UL 508A up to 600V
⌛ waiting approval at editorial deadline
○ no certification required

Part no.	Type no.	USA	Canada	Germ. Lloyd	Germany	Netherlands	China
03 350				●			
03 351				●			
03 354				●			
03 355				●			
03 369				●			
03 370				●			
03 654				●			
03 656				●			
03 693				●			
03 758				●			
03 759				●			
03 760				●			
03 761				●			
03 762				●			
03 763				●			
03 764				●			
03 765				●			
03 766				●			
03 767				●			
03 768				●			
03 769				●			
05 779							○
05 780							○
05 781							○
05 782							○
05 783							○
05 784							○
05 785							○
05 786							○
05 787							○
05 788							○
05 789							○
05 790							○
05 791							○
05 792							○
05 800							○
05 801							○
05 802							○
31 110	AES10 x 38	℞	●				●
31 111	AES10 x 38	℞	●				●
31 112	AES10 x 38	℞	●				●
31 113	AES10 x 38	℞	●				●
31 114	AES10 x 38	℞	●				●
31 115	AES14 x 51	℞	●				●
31 116	AES14 x 51	℞	●				●
31 117	AES14 x 51	℞	●				●
31 118	AES14 x 51	℞	●				●
31 119	AES14 x 51	℞	●				●
31 120	AES22 x 58	℞	●				●
31 121	AES22 x 58	℞	●				●

Part no.	Type no.	USA	Canada	Germ. Lloyd	Germany	Netherlands	China
31 122	AES22 x 58	℞	●				●
31 123	AES22 x 58	℞	●				●
31 124	AES22 x 58	℞	●				●
31 130	AES10 x 38	℞	●				●
31 132	AES10 x 38	℞	●				●
31 133	AES10 x 38	℞	●				●
31 135	AES14 x 51	℞	●				●
31 138	AES14 x 51	℞	●				●
31 140	AES22 x 58	℞	●				●
31 143	AES22 x 58	℞	●				●
31 158	SPL-D0			●	●		
31 168	AES14 x 51	℞	●				●
31 171	AES22 x 58	℞	●				●
31 173				●			
31 174				●			
31 175				●			
31 176				●			
31 205		℞					
31 206		℞					
31 207		℞					
31 208		℞					
31 209		℞					
31 210		℞					
31 211		℞					
31 212		℞					
31 213		℞					
31 214		℞					
31 215		℞					
31 216		℞					
31 217		℞					
31 218		℞					
31 219		℞					
31 220		℞					
31 221		℞					
31 222		℞					
31 223		℞					
31 224		℞					
31 225		℞					
31 226		℞					
31 227		℞					
31 228		℞					
31 229		℞					
31 232	SPL-10 x 38			●			
31 235		℞	●				
31 236		℞	●				
31 237		℞	●				
31 238		℞	●				
31 239		℞	●				
31 240		℞	●				
31 241		℞	●				

● approved
℞ UL Recognized
* for feeder circuits approved according to UL 508A up to 600V
⌛ waiting approval at editorial deadline
○ no certification required

Part no.	Type no.	USA	Canada	Germ. Lloyd	Germany	Netherlands	China
31 242		UL	●				
31 243		UL	●				
31 244		UL	●				
31 245		UL	●				
31 246		UL	●				
31 247		UL	●				
31 248		UL	●				
31 249		UL	●				
31 250		UL	●				
31 251		UL	●				
31 252		UL	●				
31 275	AES10 x 38	UL	●				
31 276	AES10 x 38	UL	●				●
31 277	AES10 x 38	UL	●				●
31 278	AES10 x 38	UL	●				●
31 279	AES14 x 51	UL	●				●
31 280	AES14 x 51	UL	●				●
31 281	AES14 x 51	UL	●				●
31 282	AES22 x 58	UL	●				●
31 283	AES22 x 58	UL	●				●
31 284	AJC 30	●*	●				
31 285	AJC 30	●*	●				
31 286				●			
31 287	AJC 30	●*	●				
31 288				●			
31 291				●			
31 293				●			
31 294	AES CC	●*	●				
31 295	AES CC	●*	●				
31 296	AES CC	●*	●				
31 297	AES CC	●*	●				
31 298	AES CC	●*	●				
31 299	AES CC	●*	●				
31 300	AES CC	●*	●				
31 301				●	●		
31 302				●	●		
31 303				●	●		
31 306				●	●		
31 307	APS-D0			●	●		
31 308	APS-D0			●	●		
31 313	APS-D0			●	●		
31 314	APS-D0			●	●		
31 315	APS-D0			●	●		
31 320			●				
31 321			●				
31 322			●				
31 323			●				
31 324			●				
31 325			●				
31 326			●				

Part no.	Type no.	USA	Canada	Germ. Lloyd	Germany	Netherlands	China
31 327			●				
31 333			●				
31 338			●				
31 345			●				
31 347			●				
31 351			●				
31 352			●				
31 353			●				
31 354			●				
31 355			●				
31 357			●				
31 358			●				
31 359			●				
31 394		UL	●				
31 395		UL	●				
31 396		UL	●				
31 397		UL	●				
31 398		UL	●				
31 399		UL	●				
31 400		UL	●				
31 401		UL	●				
31 402		UL	●				
31 403		UL	●				
31 404		UL	●				
31 405		UL	●				
31 406		UL	●				
31 407		UL	●				
31 441				●			
31 442				●			
31 525	SPL-D0			●	●		
31 548	CTB25-118	●*					
31 549	CTB25-318	●*					
31 550	CTB-T35	●*					○
31 552	CTB-C3	●*					
31 561	CTB25-C318	●*					
31 918				●			
31 919				●			
31 920	AJC 60	●*	●				
31 921	AJC 60	●*	●				
31 922	AJC 60	●*	●				
31 923	AJC 60	●*	●				
31 924	AJC 60	●*	●				
31 925	AJC 60	●*	●				
31 929	AES CC	●*	●				
31 930	AES10 x 38	UL	●				●
31 932	AJC 30	●*	●				
31 933	AJC 30	●*	●				
31 934	AJC 30	●*	●				
31 935	CEL18			●	●		
31 936	CEL18			●	●		

● approved
UL UL Recognized
* for feeder circuits approved according to UL 508A up to 600V
⌛ waiting approval at editorial deadline
○ no certification required

Part no.	Type no.	USA	Canada	Germ. Lloyd	Germany	Netherlands	China
31 940	AES14 x 51	℞	●				●
31 941	AES14 x 51	℞	●				●
31 942	AES22 x 58	℞	●				●
31 943	AES22 x 58	℞	●				●
31 947				●			
31 950				●			
31 951				●			
31 954	AEL10 x 38	℞*	●		●		
31 955	AEL10 x 38	℞*	●		●		
31 957	AES22 x 58	℞	●				●
31 958	AELCC	●*	●				
31 959	AELCC	●*	●				
31 961	AEL10 x 38				●		
31 962	AEL10 x 38				●		
31 972	AES14 x 51	℞	●				●
32 004							○
32 137	60250.1-L	●*	●	●			○
32 138	60630.1-L	●*	●	●			○
32 140	60250.1-L	●*	●	●			○
32 156	60250.1-L	●*	●	●			○
32 157	60630.1-L	●*	●	●			○
32 168	60250	℞	●	●			○
32 214	60200	℞	●	●			○
32 215	60200	℞	●	●			○
32 216	60250	℞	●	●			○
32 400	EMC6025-L	●*	●	●			○
32 401	EMC6025-L	●*	●	●			○
32 402	EMC6025-L	●*	●	●			○
32 404	EMC6032-L	●*	●	●			○
32 408	EMC6032-L	●*	●	●			○
32 412	EMC6045-L	●*	●	●			○
32 416	EMC6045-L	●*	●	●			○
32 420	EMC6000-L	●*	●	●			○
32 421	EMC6000-L	●*	●	●			○
32 425	EMC6000-L	●*	●	●			○
32 426	EMC6000-L	●*	●	●			○
32 427	EEC6025-L	●*	●	●			○
32 428	EEC6025-L	●*	●	●			○
32 429	EEC6025-L	●*	●	●			○
32 430	EEC6025-L	●*	●	●			○
32 431	EEC6025-L	●*	●	●			○
32 432	EEC6025-L	●*	●	●			○
32 433	EEC6025-L	●*	●	●			○
32 434	EEC6025-L	●*	●	●			○
32 436	EEC6025-L	●*	●	●			○
32 438	EEC6025-L	●*	●	●			○
32 439	EEC6025-L	●*	●	●			○
32 440	EEC6025-L	●*	●	●			○
32 441	EEC6032-L	●*	●	●			○
32 442	EEC6032-L	●*	●	●			○
32 443	EEC6032-L	●*	●	●			○
32 444	EEC6032-L	●*	●	●			○
32 445	EEC6025-L	●*	●	●			○
32 446	EEC6032-L	●*	●	●			○
32 448	EEC6025-L	●*	●	●			○
32 449	EEC6032-L	●*	●	●			○
32 450	EEC6025-L	●*	●	●			○
32 451	EEC6025-L	●*	●	●			○
32 452	EEC6025-L	●*	●	●			○
32 453	EEC6025-L	●*	●	●			○
32 454	EEC6063-L	●*	●	●			○
32 455	EEC6063-L	●*	●	●			○
32 456	EEC6063-L	●*	●	●			○
32 457	EEC6063-L	●*	●	●			○
32 459	EEC6063-L	●*	●	●			○
32 460	EEC6063-L	●*	●	●			○
32 461	EEC6063-L	●*	●	●			○
32 463	EEC6063-L	●*	●	●			○
32 466	EEC6080-L	●*	●	●			○
32 467	EEC6080-L	●*	●	●			○
32 469	EEC6080-L	●*	●	●			○
32 472	EEC6080-L	●*	●	●			○
32 477	EEC6000-L	●*	●	●			○
32 478	EEC6000-L	●*	●	●			○
32 484	EEC6000-L	●*	●	●			○
32 485	EEC6000-L	●*	●	●			○
32 533	EEC6025-L	●*	●	●			○
32 534	EEC6025-L	●*	●	●			○
32 535	EEC6063-L	●*	●	●			○
32 549	EPC60160-L	●*	●				○
32 570	EPC60160-L	●*	●				○
32 575	EPC60160-L	●*	●				○
32 578							○
32 579							○
32 580							○
32 581							○
32 582							○
32 583							○
32 584							○
32 585							○
32 592							○
32 947	TS35-L	●*	●	●			○
32 948	TS35-L	●*	●	●			○
32 949	TS35-L	●*	●	●			○
32 950	TS35-L	●*	●	●			○
32 951	TS35-L	●*	●	●			○
32 954	X-L	●*	●	●			○
32 963				●			○
32 964				●			○
32 973	EEC25-L	●*	●	●			○

● approved
℞ UL Recognized
* for feeder circuits approved according to UL 508A up to 600V
⌛ waiting approval at editorial deadline
○ no certification required

Part no.	Type no.	USA	Canada	Germ. Lloyd	Germany	Netherlands	China
32 974	EEC80-L	● *	●	●			○
32 975	60630.1-L	● *	●	●			○
32 976	60250.1-L	● *	●	●			○
32 977	60250.1-L	● *	●	●			○
32 981	EEC6080-L	● *					○
33 093	SLS1						●
33 094	SLS2						●
33 095	SLS3						●
33 097	SLS1						●
33 098	SLS2						●
33 099	SLS3						●
33 126							○
33 127							○
33 128							○
33 149	LTS1			●		●	●
33 150	LTS2			●		●	●
33 151	LTS3			●		●	●
33 160	LTS1			●		●	●
33 161	LTS2			●		●	●
33 162	LTS3			●		●	●
33 173							○
33 174							○
33 179							○
33 180							○
33 198	QCB-NH00			●	●		●
33 199	LTS00			●			●
33 200	LTS00			●			●
33 201	LTS1			●		●	●
33 202	LTS2			●		●	●
33 203	LTS3			●		●	●
33 206	LTS00						●
33 207	LTS00						●
33 208	LTS00						●
33 216	LTS000			●			●
33 217	LTS000			●			●
33 221	LTS00			●			●
33 222	LTS00			●			●
33 234	SLS00						●
33 235	SLS00						●
33 243	SLS1						●
33 244	SLS2						●
33 245	SLS3						●
33 285	SLS00						●
33 286	SLS00						●
33 287	SLS1						●
33 288	SLS2						●
33 289	SLS3						●
33 308	JC400	● *	●				
33 311	JC400B	UL *	●				
33 321	SLS3						●

Part no.	Type no.	USA	Canada	Germ. Lloyd	Germany	Netherlands	China
33 324	QCB-NH00			●			●
33 325	QCB-NH1			●			
33 326	LTS2			●		●	●
33 328	LTS00						●
33 329	LTS00						●
33 330	LTS1			●		●	●
33 331	LTS2			●		●	●
33 332	LTS3			●		●	●
33 333	LTS-250					●	
33 334	LTS-400					●	
33 335	LTS-630					●	
33 336	LTS-800					●	
33 337	LTS-F160					●	
33 338	LTS-F250					●	
33 339	LTS-F400					●	
33 340	LTS-F630					●	
33 355	LTS-250					●	
33 356	LTS-400					●	
33 357	LTS-630					●	
33 358	LTS-800					●	
33 359	LTS-F160					●	
33 360	LTS-F250					●	
33 361	LTS-F400					●	
33 362	LTS-F630					●	
33 394	QCB-NH00			●	●		●
33 398	QCB-NH00			●	●		●
33 402	QCC-Class J 100 A	UL *					
33 403	QCC-Class J 200 A	⌛					
33 416	QCB-NH00			●	●		●
33 421	QCC-Class J 30 A	⌛					
33 422	QCC-Class J 60 A	⌛					
33 500	QCB-NH00			●	●		●
33 501	QCB-NH00			●	●		●
33 502	QCB-NH00			●	●		●
33 503	QCB-NH00			●	●		●
33 504	QCB-NH00			●	●		●
33 505	QCB-NH00			●	●		●
33 601	QCB-NH1			●			●
33 602	LTS2			●		●	●
33 603	LTS3			●		●	●
35 001	Z1140-L	● *					
35 004	Centre Feed System	● *					
35 005	Centre Feed System	● *					
35 006	Centre Feed System	● *					
35 007	Centre Feed System	● *					
35 008	Z1140-L	● *					
35 009	Z1140-L	● *					
35 015	Centre Feed System	● *					
35 016	Centre Feed System	● *					
78 463	C12x 5			●			○

● approved
UL UL Recognized
* for feeder circuits approved according to UL 508A up to 600V
⌛ waiting approval at editorial deadline
○ no certification required

Information on fuses is entered on the corresponding product pages.

Dimensions

Efficiency

Alles mit Spannung
Abmessungen
Effizienz
Alles mit Spannung
Abmessungen
Effizienz

01 272

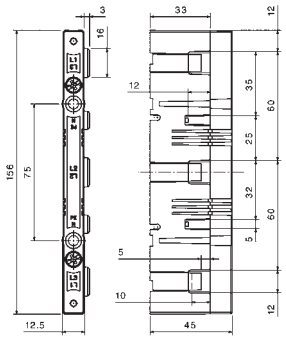

01 314
01 317

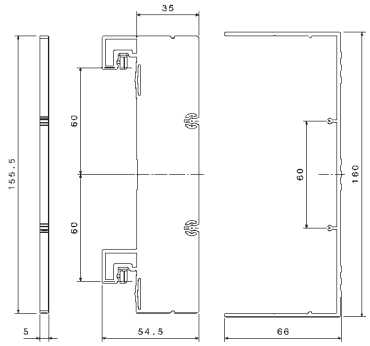

	a	b	c	d	e
01 284	7.5	11.5	22.5	25	5
01 285	10.5	15.5	29	36	5
01 287	14.5	20.5	32	42	5
01 068	17	23.5	36	55	5
01 289	7.5	11.5	22.5	25	10
01 290	10.5	15.5	29	35	10
01 292	14.5	20.5	32	42	10
01 203	17	23.5	36	55	10

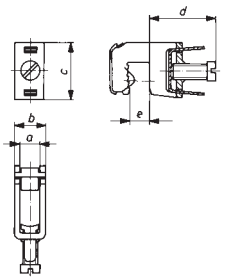

01 135

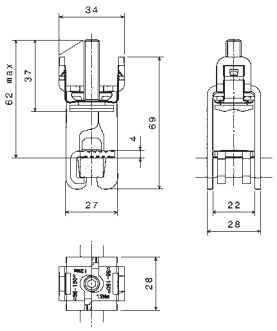

01 165

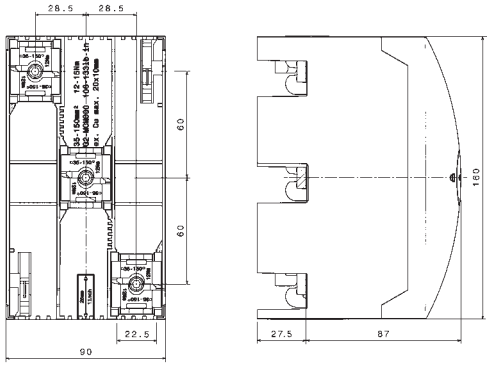

01 401

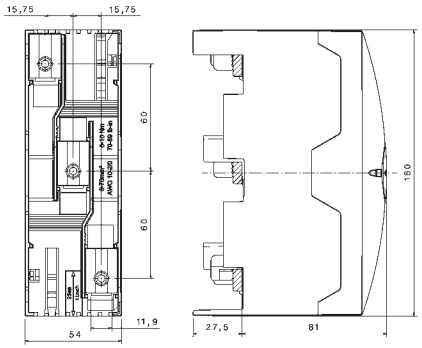

	a
32 590	45
32 591	54

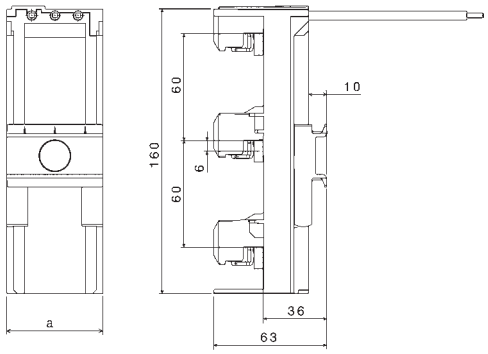

31 554

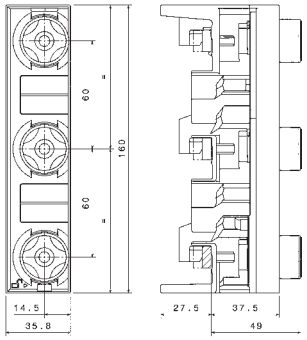

33 416

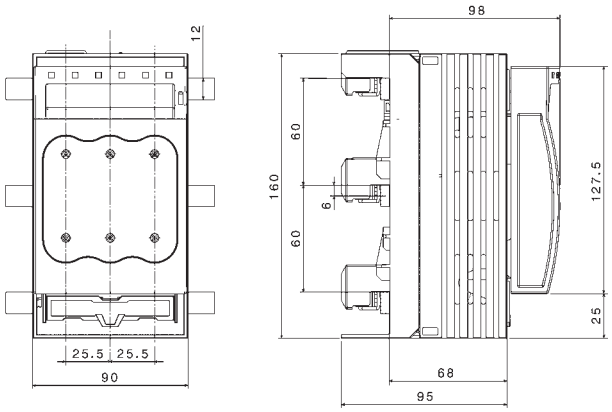

03 316

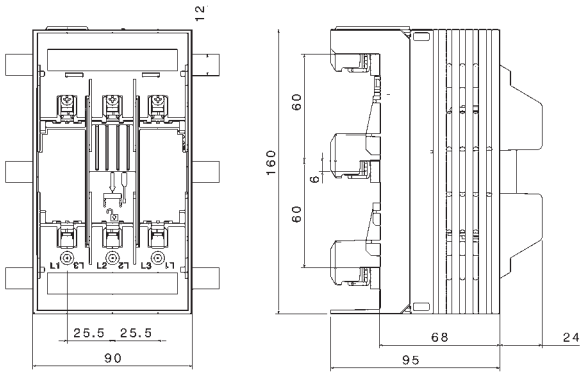

	a	b
01 364	30	
01 367	30	
01 370		90

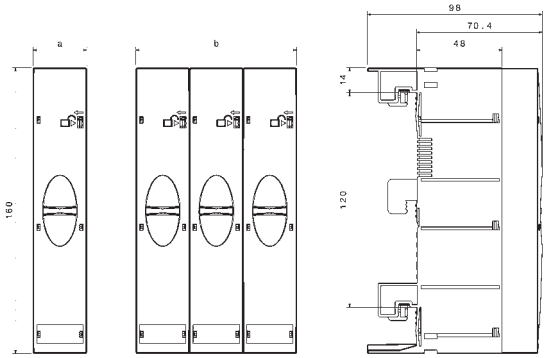

32 640

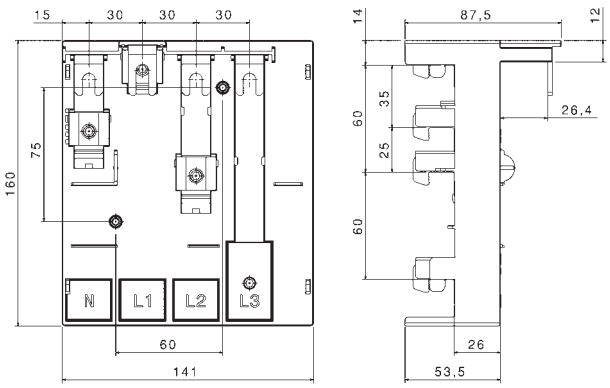

32 629
32 630

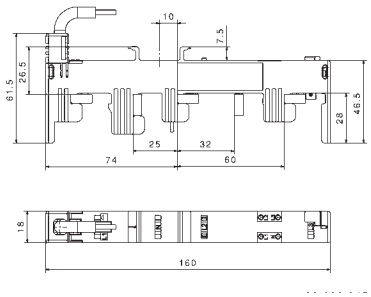

32 628

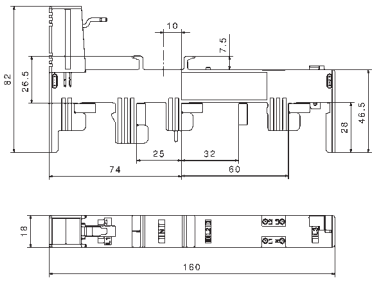

32 631

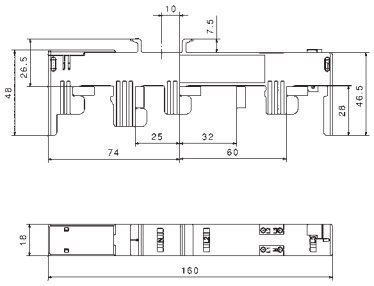

32 633

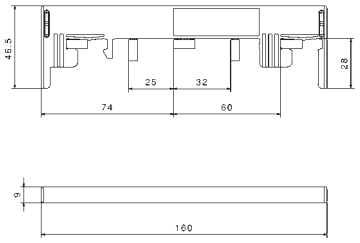

32 632
32 634

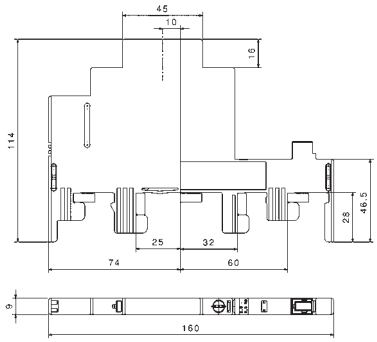

01 495

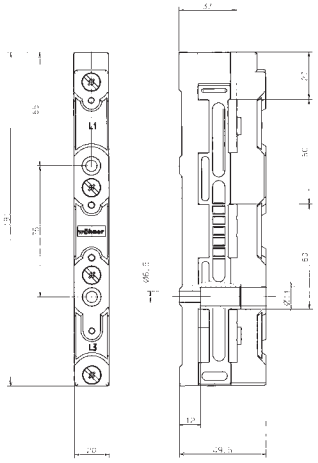

01 500

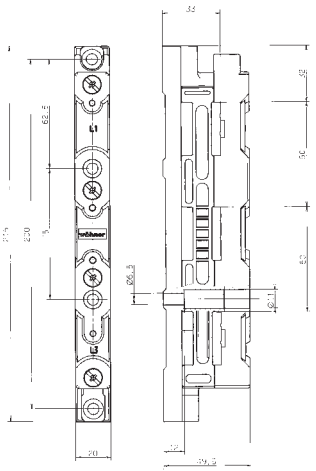

01 508
01 515
01 518

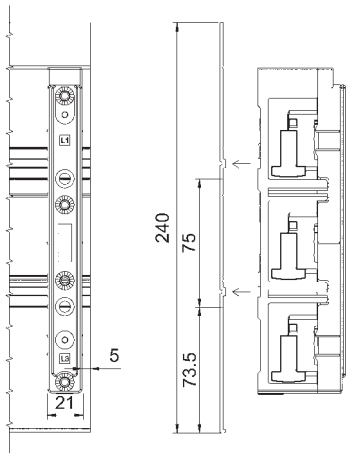

01 485

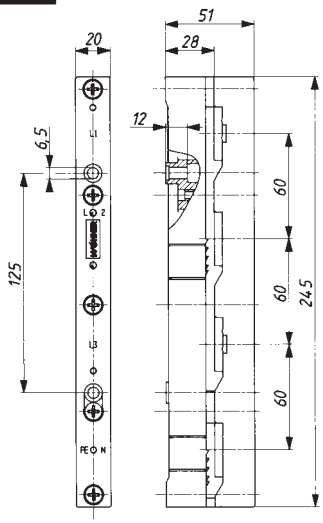

01 356

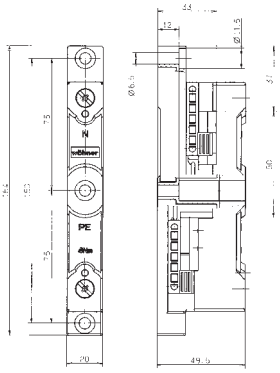

01 602

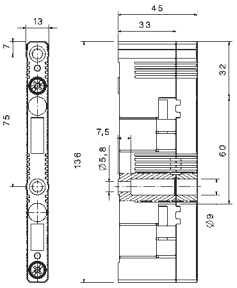

01 484

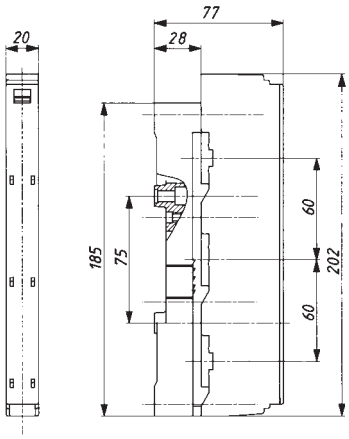

01 573

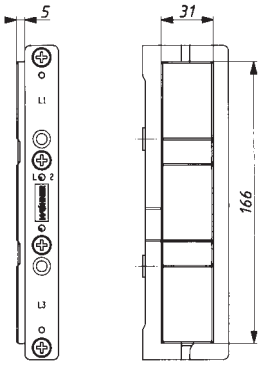

01 131

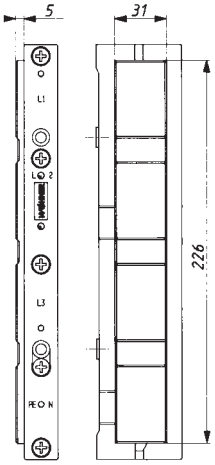

01 601

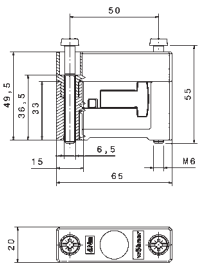

	Busbars	a	b
01 244	12 – 30 x 5	9	40
01 245	12 – 30 x 10	14	40
01 251	12 – 60 x 10	13	70

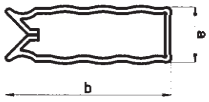

01 252

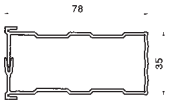

01 231

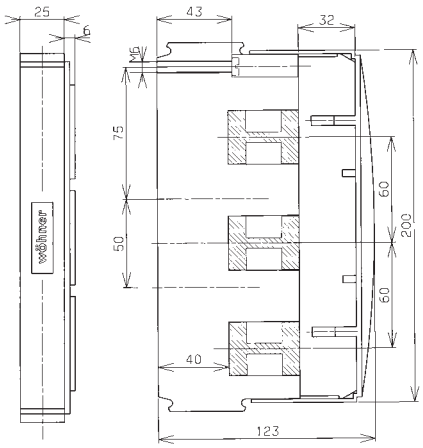

01 232

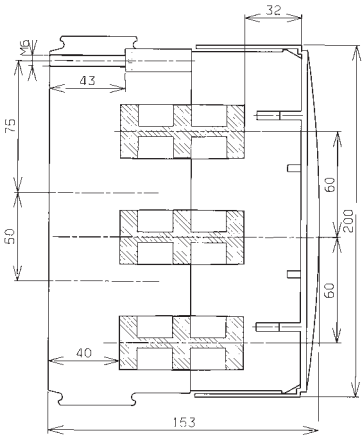

01 876

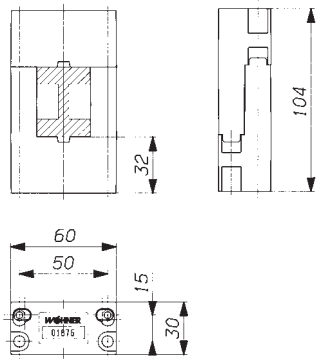

01 231
01 116

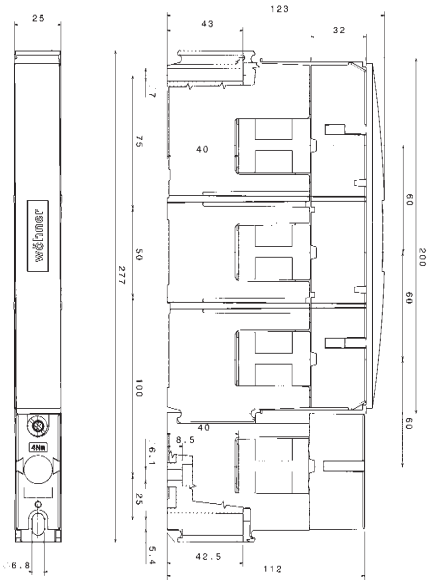

01 232
01 323

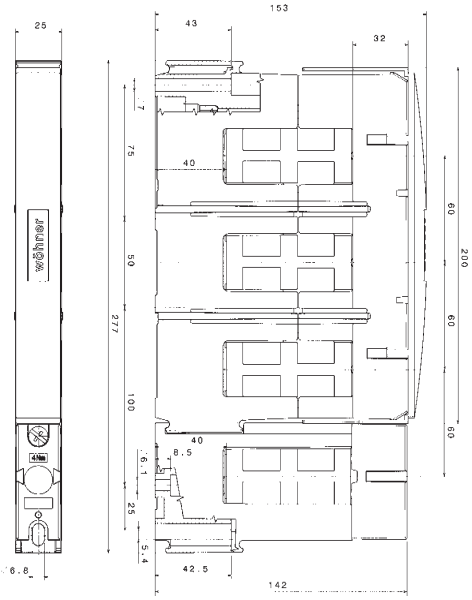

01 236
01 237
01 238

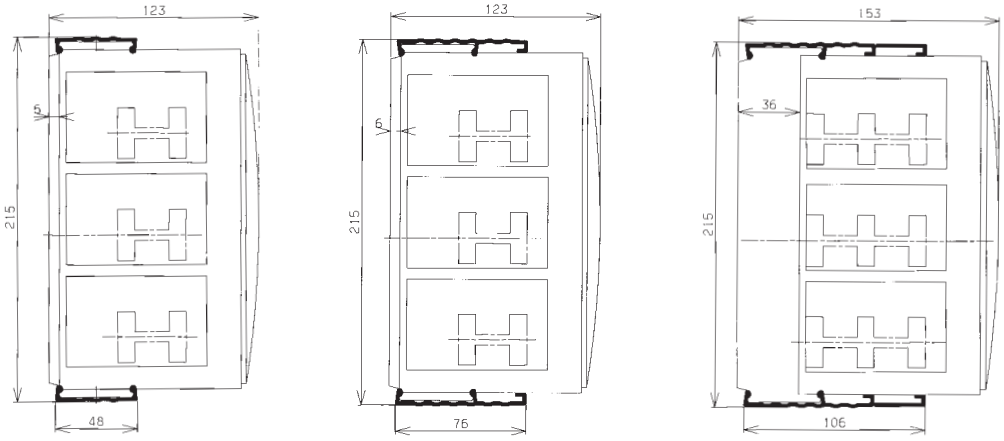

01 231
01 232
01 515

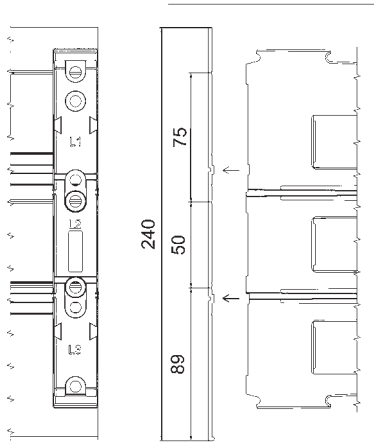

01 025
01 026

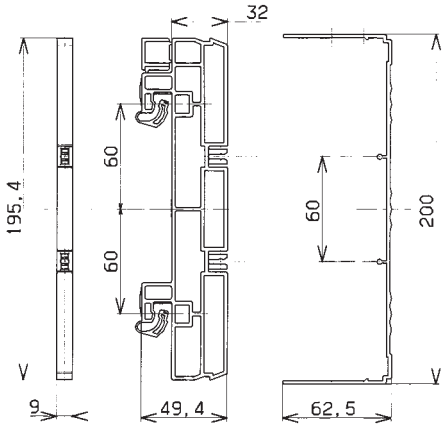

	a
01 756	135
01 757	270

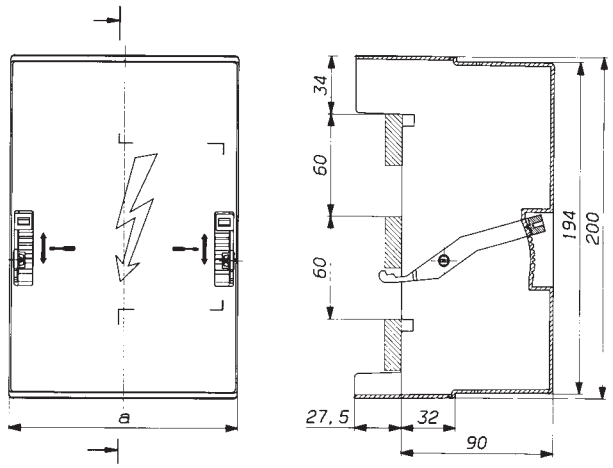

	a	b	c	d
01 590	54	55	35	189
01 413	84	55	35	189

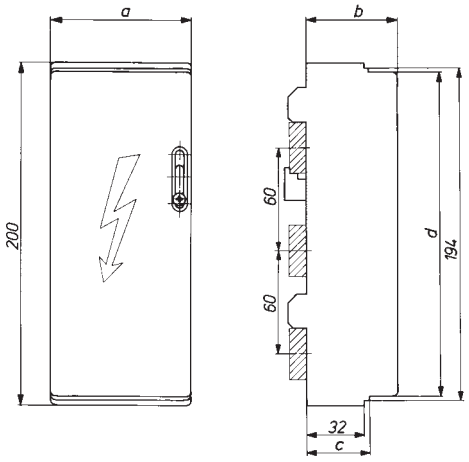

	a	b	c
01 539	180	146	166
01 540	250	216	236
01 596	228	194	214

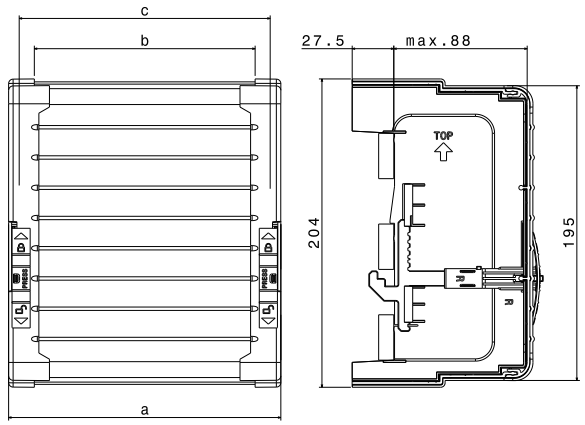

01 537
01 538

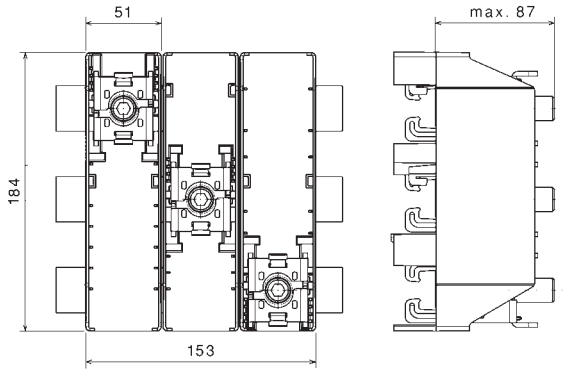

	a	b	c
01 597	228	194	214

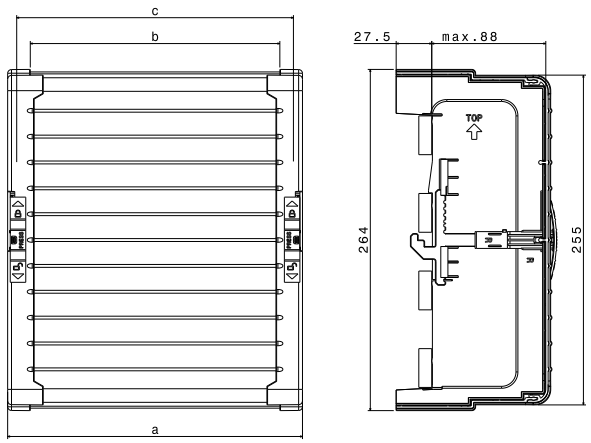

01 147
01 162

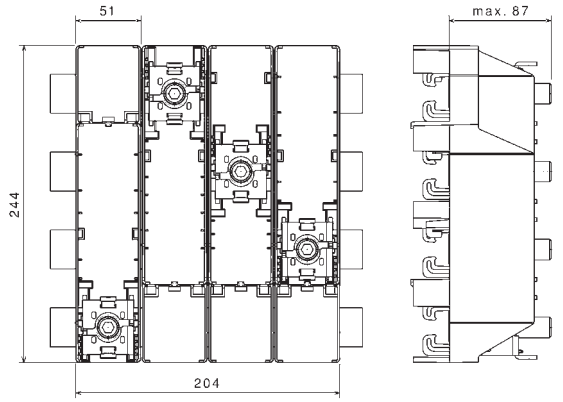

System cover, 3-pole, 4-pole

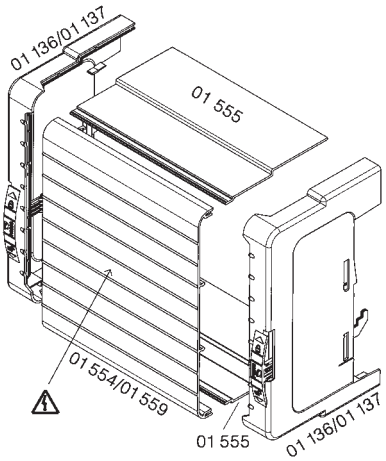

01 563

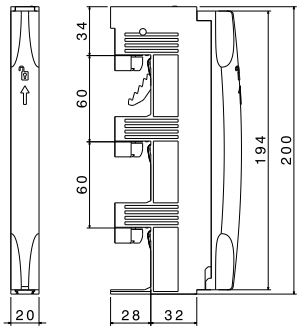

01 240
01 243

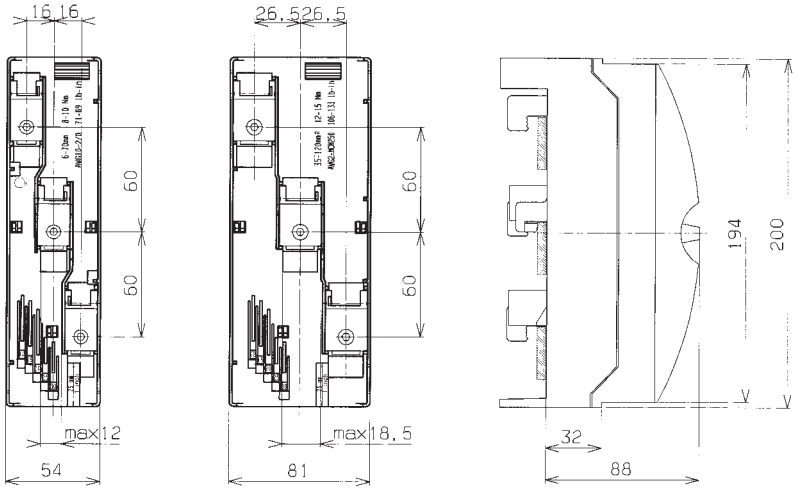

	a	b	c	d	d	e	
				min.	max.		
01 069	90	72	55	10	28	56	**01 199**
01 070	90	85	68	10	28	56	**01 753**
01 071	90	122	105	10	28	56	**01 754**

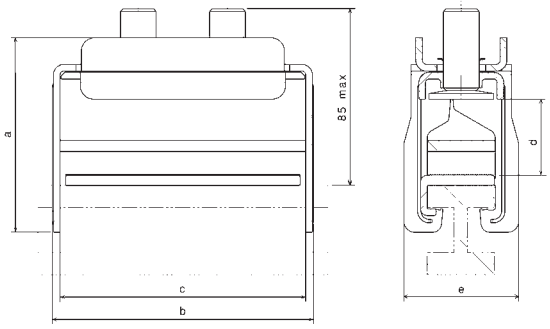

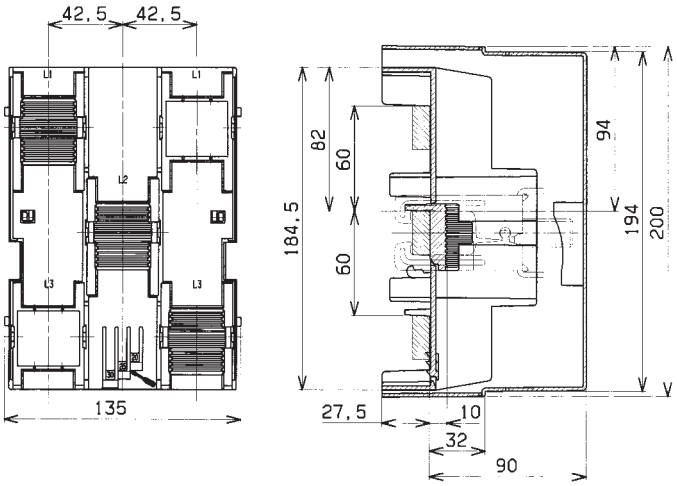

	a	b	c	d	d
				min.	max.
01 008	154	94	64	23	45
01 185	118	72	41	20	42
01 186	154	132	101	23	45
01 513	154	72	41	23	45
01 906	103	82	51	5	28
01 907	103	94	64	5	28
01 911	118	94	64	20	42
01 934	118	112	81	20	42
01 935	118	132	101	20	42
01 936	118	82	51	20	42

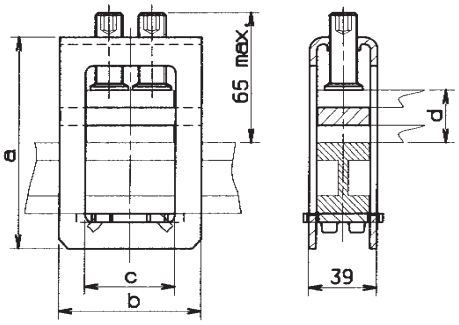

	a	b	c	d	e
01 284	7.5	11.5	22.5	25	5
01 285	10.5	15.5	29	36	5
01 287	14.5	20.5	32	42	5
01 068	17	23.5	36	55	5
01 289	7.5	11.5	22.5	25	10
01 290	10.5	15.5	29	35	10
01 292	14.5	20.5	32	42	10
01 203	17	23.5	36	55	10

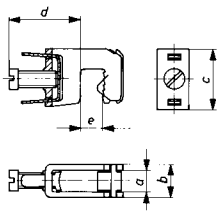

	a	b	c	d	e	f	g	max. h	l
01 047	42	38	37	47	23.5	15	27.5	55	10
01 749	42	38	37	47	23.5	15	27.5	55	5
01 514	32	29.5	29	36	20.5	12	24	42	10
01 748	32	29.5	29	36	20.5	12	24	42	5
01 512	24	17.5	19.5	24.5	11.5	9	23	30	10
01 747	24	17.5	19.5	24.5	11.5	9	23	30	5

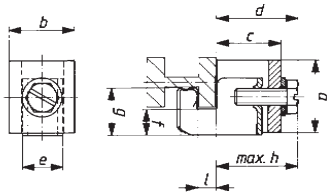

01 319

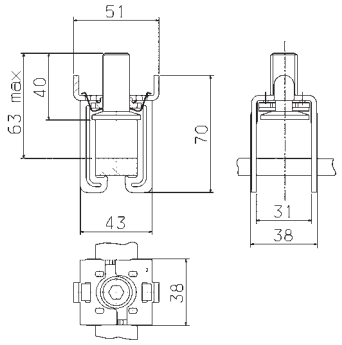

01 318

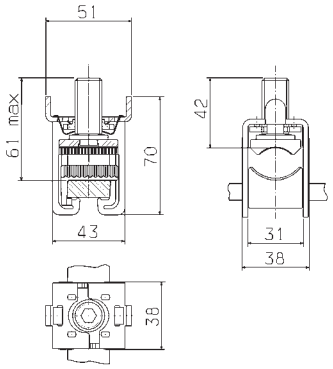

01 759

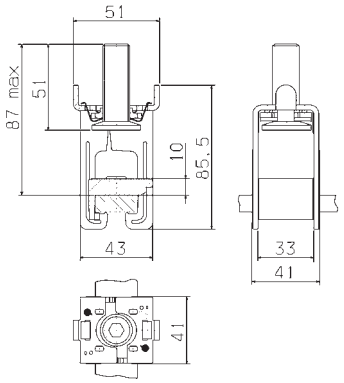

	a	b	h	c	d
01 996	20	25	20	40	45
01 997	20	30	20	40	50
01 206	20	40	20	40	60
01 586	30	30	20	50	50
01 587	30	35	20	50	55

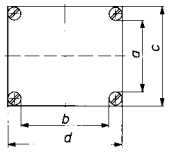

01 760

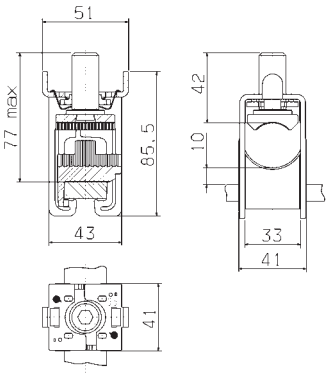

	a + b	A	c
01 200	8–24	70–150	18
01 201	10–26	120–240	21
01 202	10–26	150–300	25

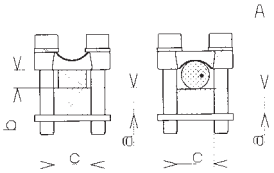

	a	b
01 823	40	–
01 141	95	36
01 886	150	85

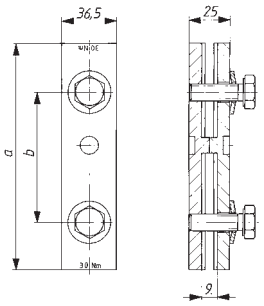

	a	b
01 166	55	43
01 193	150	138

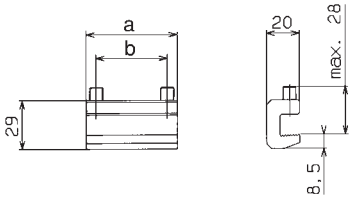

01 827

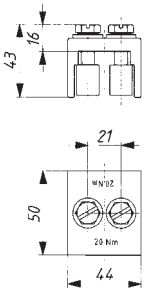

	a	b
01 145	95	40
01 829	150	90

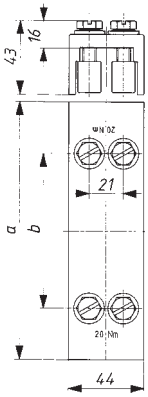

30 473

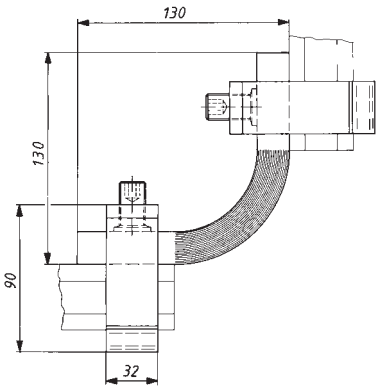

01 905

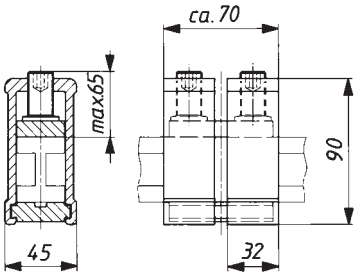

01 274

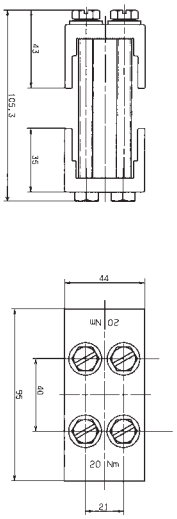

01 275

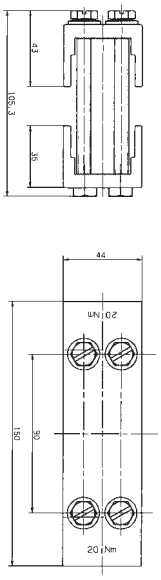

30 322

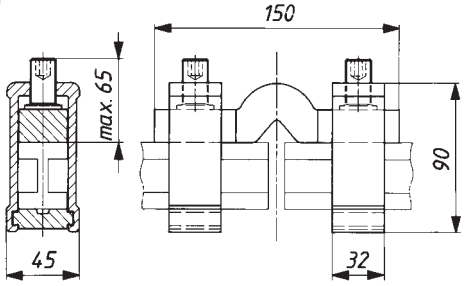

01 295

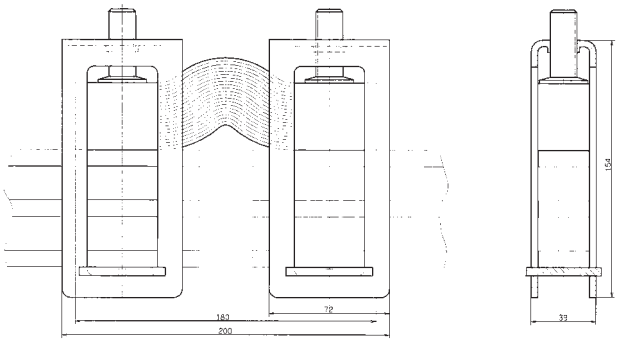

	a	b	c	d	e
32 429	200	45	63	95	125
32 430	200	45	63	–	93
32 431	200	45	63	95	93
32 432	200	90	63	95	93
32 433	260	45	63	95	93
32 436	200	45	63	95	Kl. 6mm²
32 439	260	45	63	95	Kl. 6mm²
32 441	200	54	63	–	93
32 442	200	54	63	95	93
32443	200	63	63	–	93
32444	200	72	63	–	93
32 446	200	81	63	95	93
32 449	260	54	63	95	93
32 454	200	54	63	–	115
32 455	200	54	63	95	115
32 456	200	63	103	–	115
32 457	200	72	103	–	115
32 459	200	81	63	95	115
32 461	260	54	63	95	115
32 466	200	54	63	–	Kl. 16mm²
32 467	200	54	63	95	Kl. 16mm²
32 469	200	72	63	–	Kl. 16mm²
32 472	260	54	63	95	Kl. 16mm²
32 477	200	45	63	95	–
32 478	200	54	63	95	–
32 484	260	45	63	95	–
32 485	260	54	63	95	–

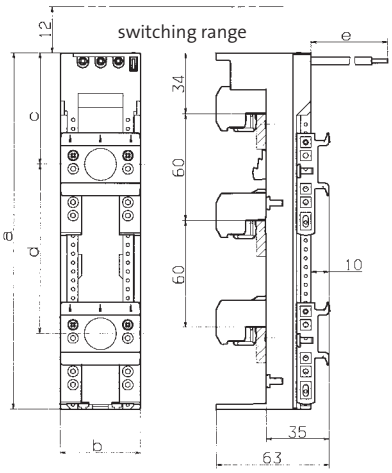

	a	b	c	d	e
32 400	200	45	63	95	93
32 401	200	45	63	95	125
32 402	260	45	63	95	93
32 404	200	54	63	95	93
32 408	260	54	63	95	93
32 412	200	54	63	95	115
32 416	260	54	63	95	115
32 420	200	45	63	95	–
32 421	200	54	63	95	–
32 425	260	45	63	95	–
32 426	260	54	63	95	–

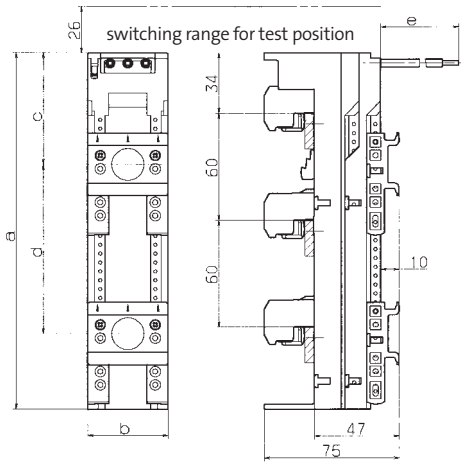

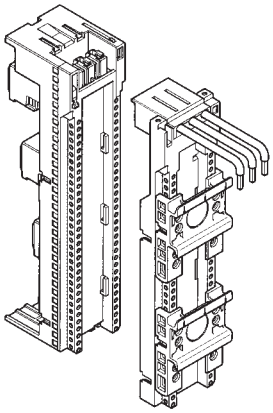

32 214

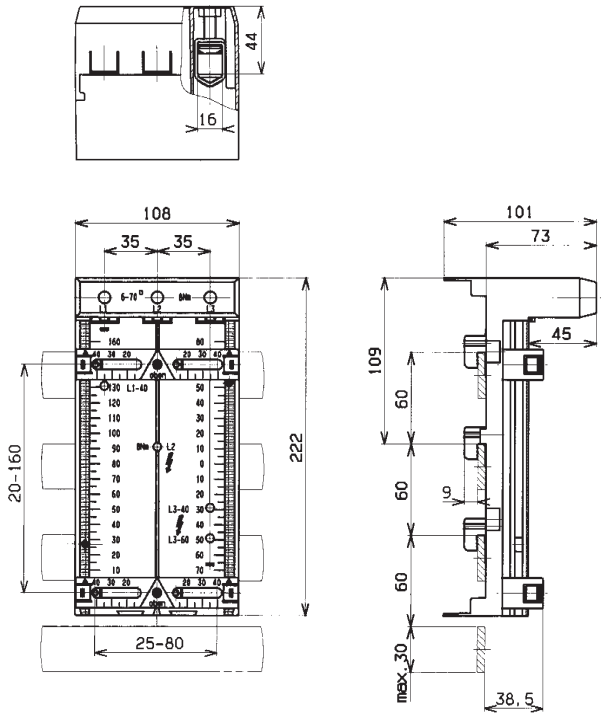

32 215

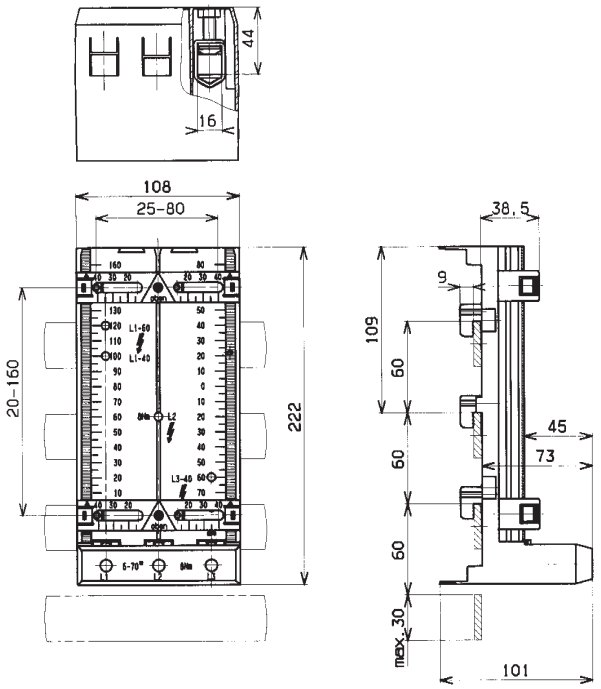

32 168

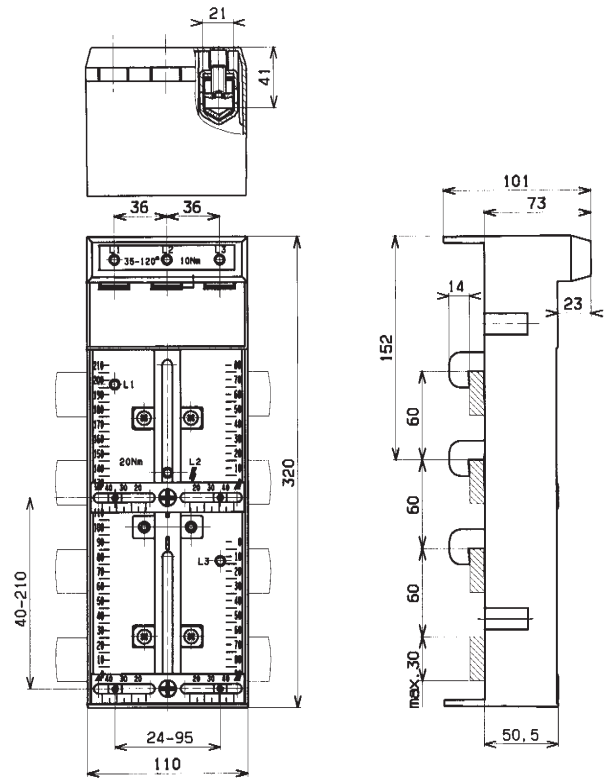

32 216

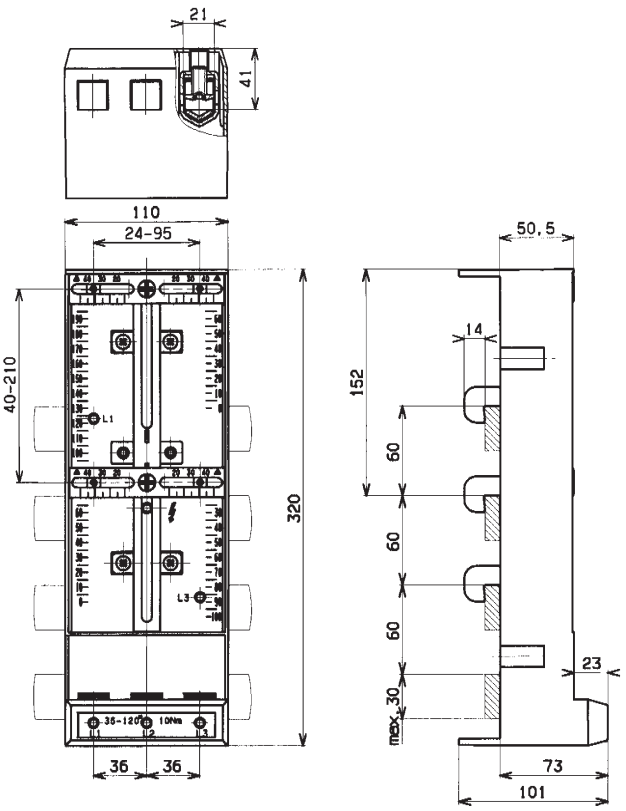

	Switchgear	A	B	C	D	E_o*	E_u**
32 137	AB 140U-J	190	106	35	–	18	10
32 138	AB 140U-L	270	140	35	–	11	12
32 140	Moeller NZM2-XKR4	190	106	35	–	22	2
32 156	SE NSX250, GE FD 250	190	106	35	–	12	12
32 157	SE NSX630	270	140	35	–	12	12
32 549	AB 140-CMN	200	90	50	–	11	–
32 570	Moeller NZM1	200	90	38	–	17	–
32 575	ABB T-max1, T-max2, GE FD 160, SE NS 80	200	90	26	–	10–20	–
32 578	Siemens 3VL2, 3VL3, 4 pole	240	140	35	–	16	–
32 579	Siemens 3VL4, 4-pol.	300	185	35	–	15	–
32 580	Moeller NZM2-XKR4, 4 pole	240	140	35	–	2	–
32 581	Moeller NZM3-XKR13O, 4 pole	300	185	35	–	15	–
32 582	SE NSX250, 4 pole	270	140	35	–	–8	–
32 583	SE NSX630, 4 pole	300	185	35	–	15	–
32 584	ABB T-max4, 4 pole	240	140	35	–	7	–
32 585	ABB T-max5, 4 pole	300	185	35	325	15	–
32 593	ABB Tmax T5	300	140	35	–	–20	50
32 601	ABB Tmax T4	240	105	35	–	–6	11
32 641	Siemens 3VT630	300	140	35	–	12	18
32 651	Siemens 3VT250	240	105	35	–	20	6
32 975	Siemens 3VL4	295	140	55	–	6	19
32 976	Siemens 3VL1 UL	190	106	53	–	8	15
32 977	Siemens 3VL2, 3VL3 UL	190	106	53	–	16	7
32 978	Moeller NZM3-XKR13O	300	140	35	–	15	15
32 980	Siemens 3VL5	325	184	55	–	–7	–
32 981	Siemens S3	200	72	27	–	20	–

* E_o Switch centre displacement in case of upper connection
** E_u Switch centre displacement in case of lower connection

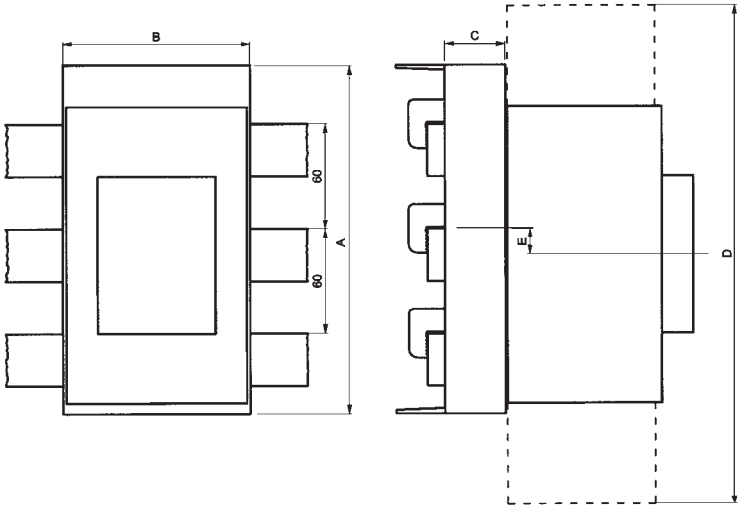

	a	b
E 18	27	50
E 18 *	36	50
E 27	42	70
E 33 (500 V)	57	70
E 33 (690 V)	57	92
*** 1 1/3 width version**		

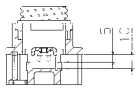

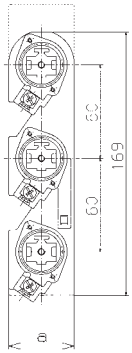

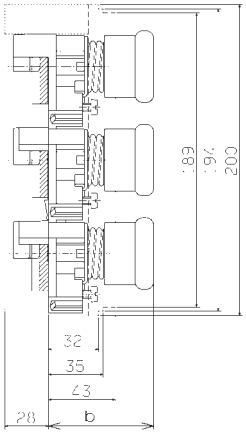

31 158
31 232
31 160

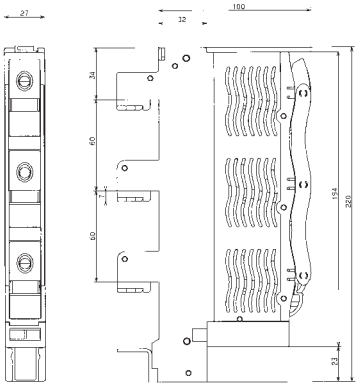

31 954
31 955
31 958
31 959

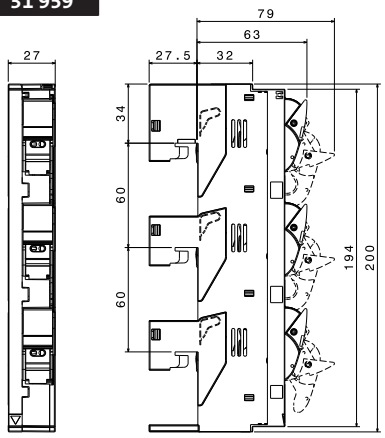

31 956
31 960
31 961
31 962

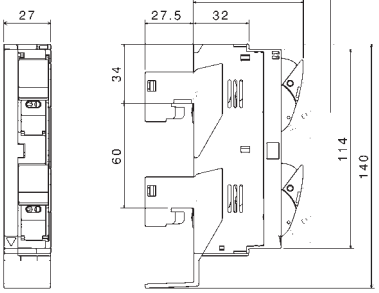

31 963
31 964

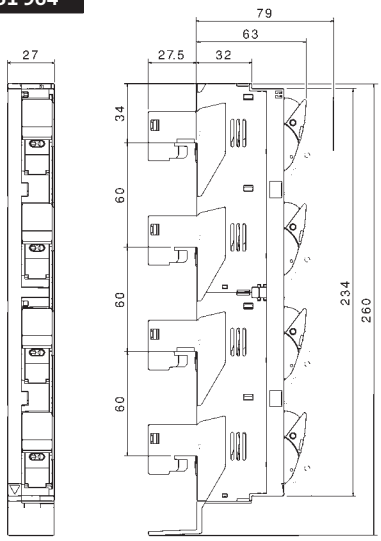

03 520

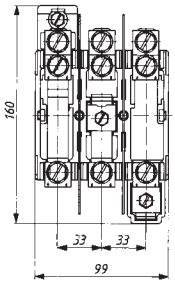

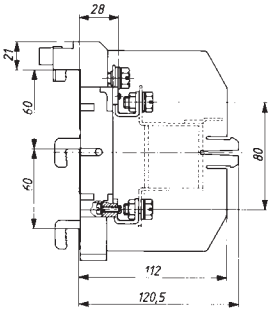

03 518

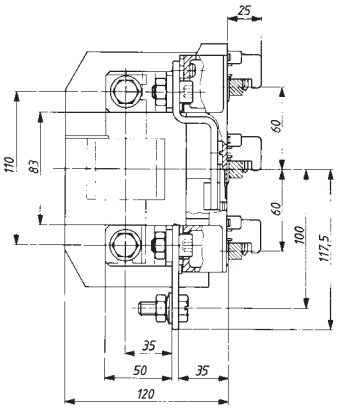

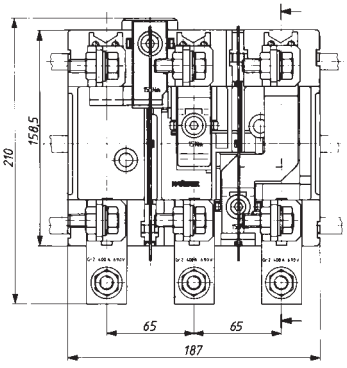

		a	b	c	d	e	g	h	l	m	p	q	r	s	x
33 402	100 A	106	200	104.5	67.5	95	66	155	94	200	32	35	189	194	33

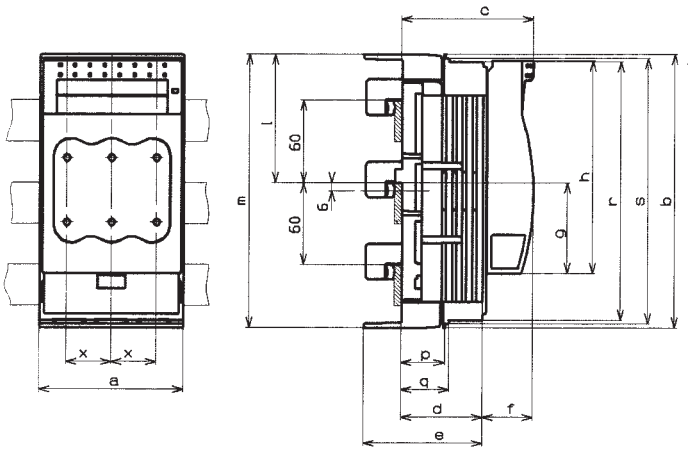

33 403

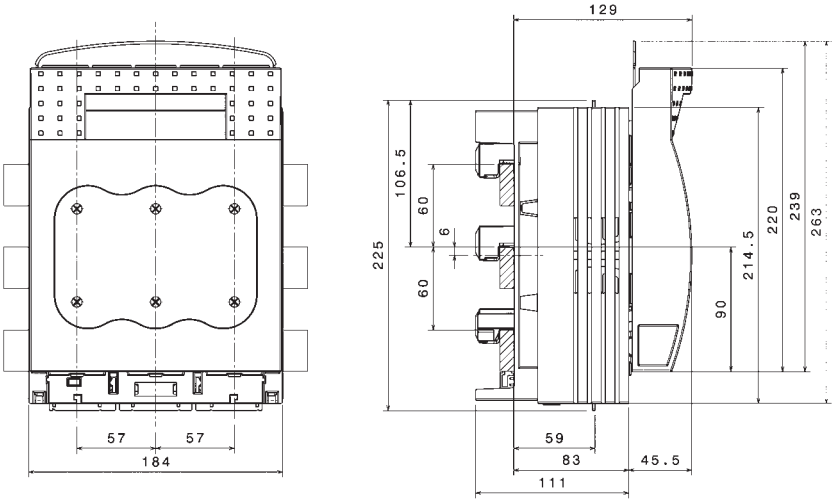

	a	b	c	d	e	f	l	p	q	x
33 311	256	267	132.5	112.5	285	20	121.5	136.5	139	81

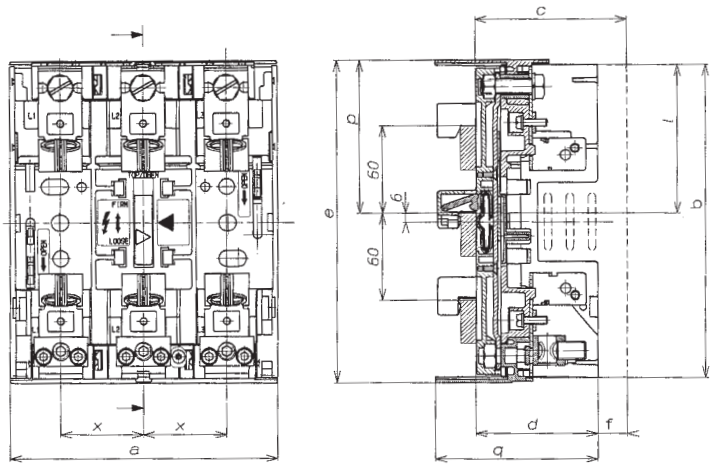

03 199
03 299

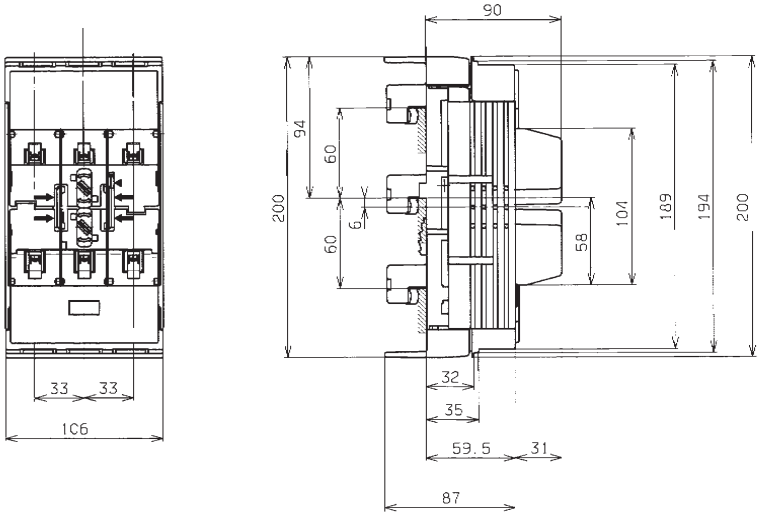

03 300
03 301

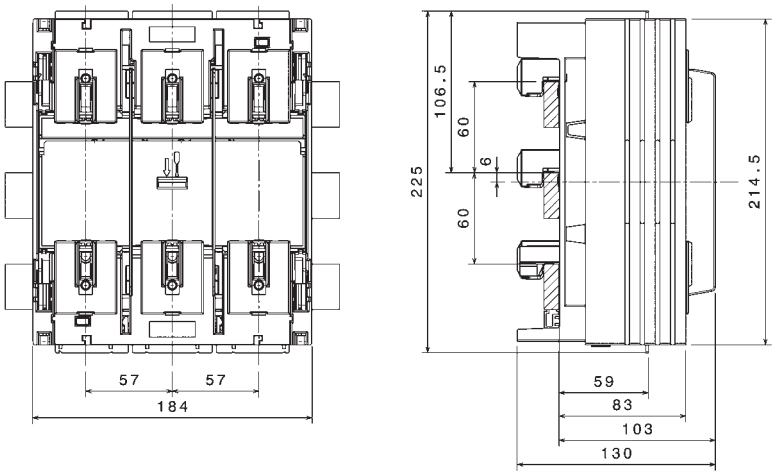

03 654
03 656

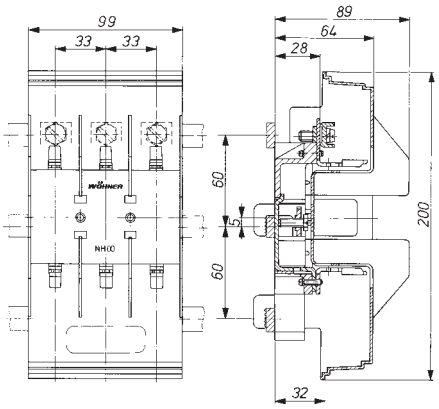

	a	b	c	d	e	x
03 693	206	121	195	104	40	65

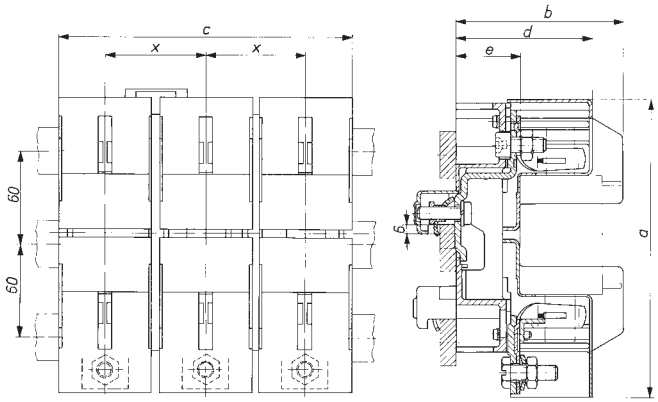

33 216

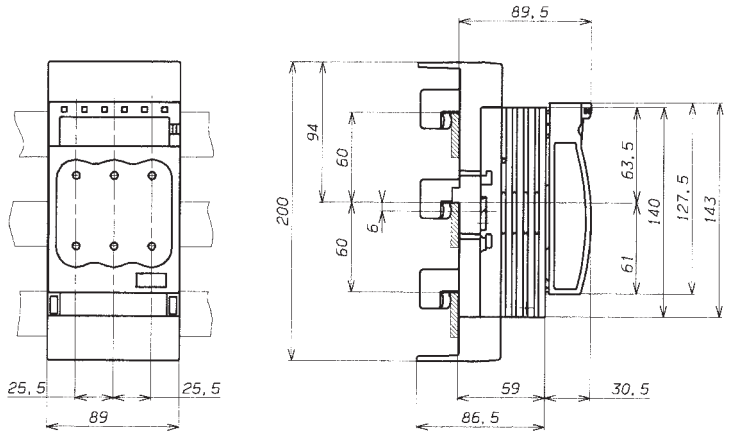

	Size	a	b	c	d	e	f	g	h	k	l	m	o	p	q	r	s	x
33 198	00	106	200	97	59.5	87	37	66	155	–	94	200	220.5	32	35	189	194	33
33 398	00	106	200	97	59.5	87	37	66	155	–	94	200	220.5	32	35	189	194	33
33 206	00	106	200	171.5	59.5	87	112	66	155	64	94	200	220.5	32	35	189	194	33
33 324	00	106	200	136.5	59.5	87	77	66	155	36	94	200	220.5	32	35	189	194	33
33 394	00	106	200	136.5	59.5	87	77	66	155	36	94	200	220.5	32	35	189	194	33
33 420	00	106	200	171.5	59.5	87	112	66	155	64	94	200	220.5	32	35	189	194	33

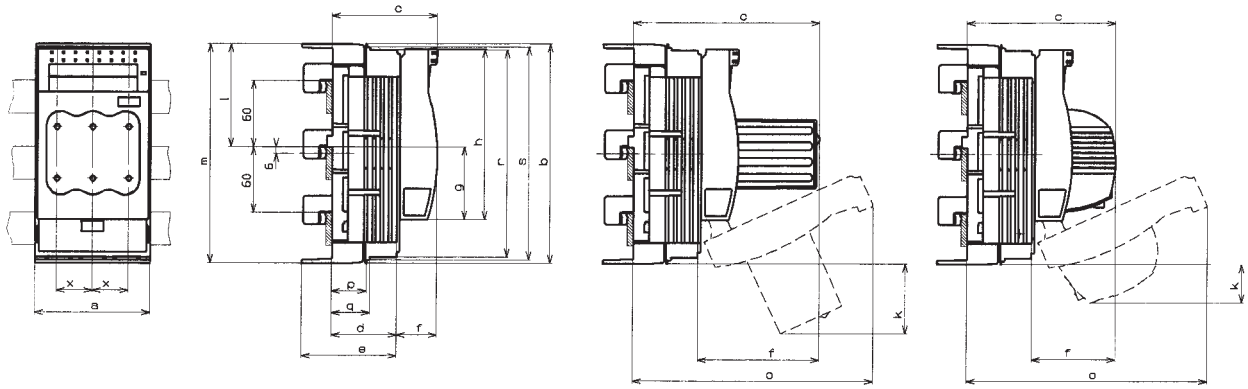

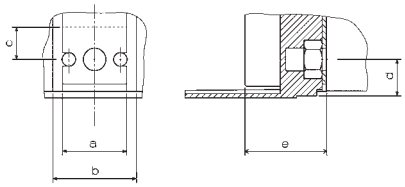

Size	a	b	c	d	e
00	20	25	14.5	10	32

	Size	a	b	c	d	e	f	g	h	l	m	p	q	r	x
33 600	1	184	243	128.5	83	221	45.5	90	220	101	214.5	104.5	110.5		57
33 601	1	184	243	128.5	83	221	45.5	90	220	101	214.5	104.5	110.5	M10	57
33 602	2	210	288	145	97	268	48	98	249	118	255	128	124.5	M10	65
33 603	3	256	300	159.5	111.5	285	48	104.5	259	121.5	267	136.5	139	M12	81
33 160	1	184	243	203.5	83	221	120.5	90	220	101	214.5	104.5	110.5	M10	57
33 161	2	210	288	220	97	268	123	98	249	118	255	128	124.5	M10	65
33 162	3	256	300	234.5	111.5	285	123	104.5	259	121.5	267	136.5	139	M12	81
33 325	1	184	243	171	83	221	80	90	220	101	214.5	104.5	110.5	M10	57
33 326	2	210	288	187.5	97	268	90.5	98	249	118	255	128	124.5	M10	65
33 327	3	256	300	202	111.5	285	90.5	104.5	259	121.5	267	136.5	139	M12	81

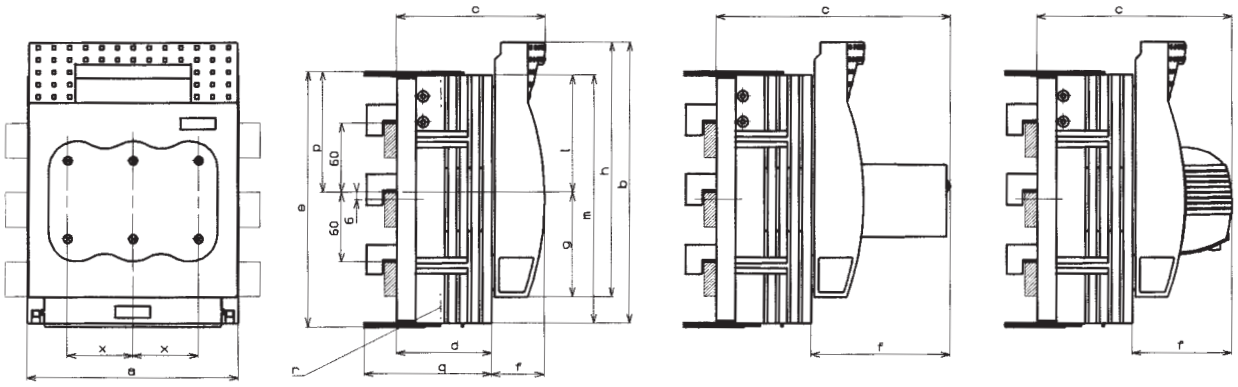

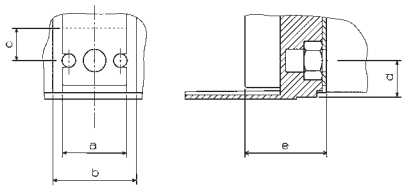

Size	a	b	c	d	e
00	20	25	14.5	10	32
1	30	39	17	17	38
2	33	42	19	19.5	42
3	40	52	20	24	47.5

33 317	Size 00
33 315	Size 00
33 142	Size 1
33 316	Size 2

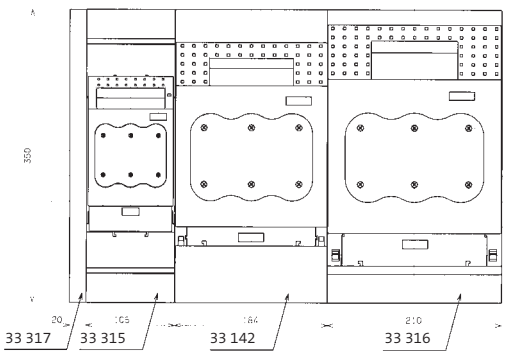

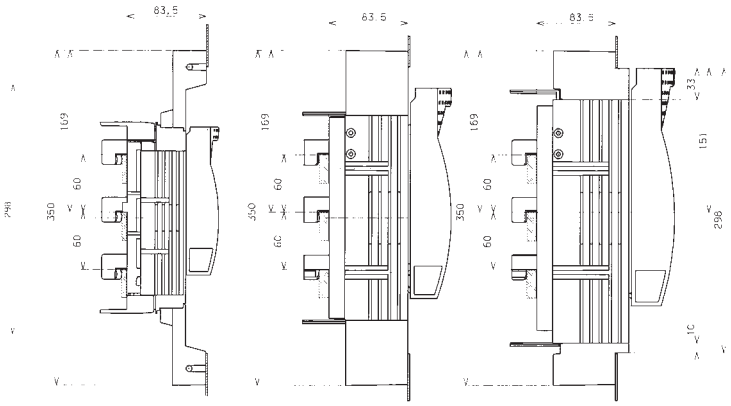

33 500
33 501
33 506
33 540
33 541

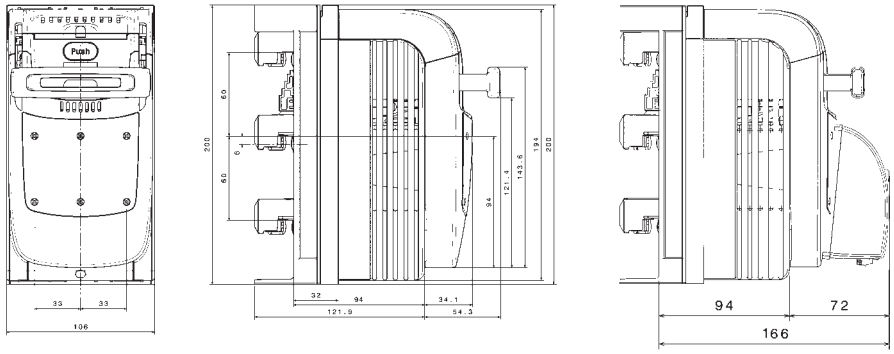

33 503
33 504
33 543
33 544
33 910
33 911

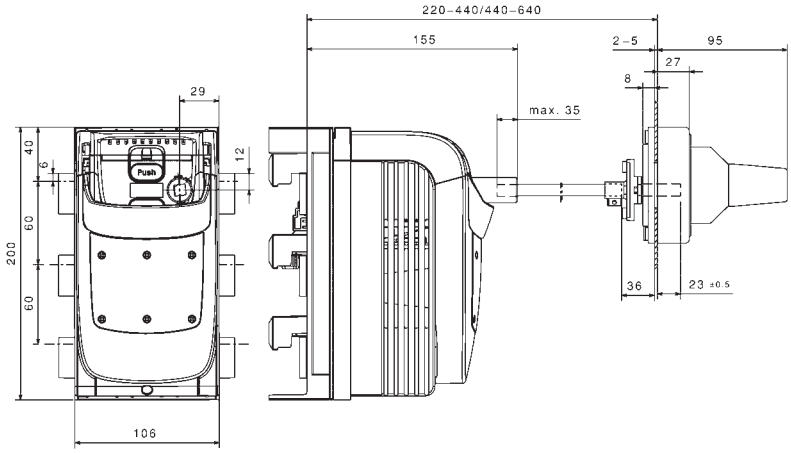

33 910
33 911

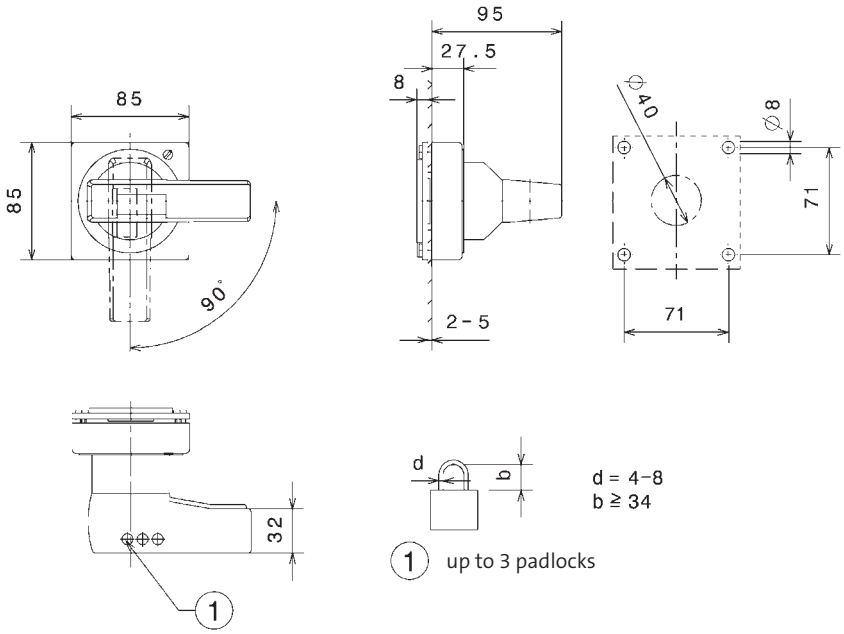

	x	y
33 510	0	0
33 511	28	97.5
33 516	0	0
33 550	0	0
33 551	28	97.5

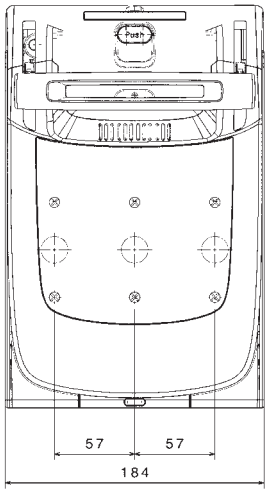

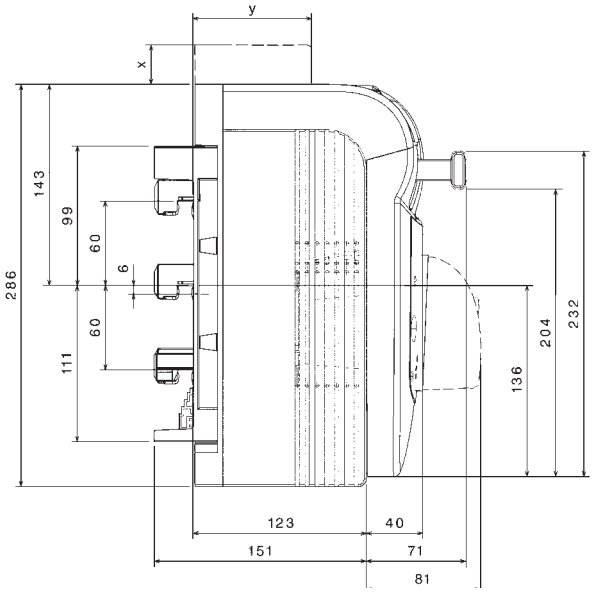

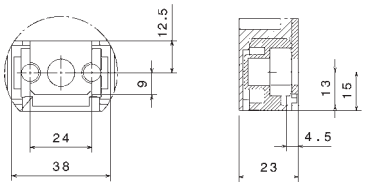

	x	y
33 513	0	0
33 514	28	97.5
33 553	0	0
33 554	28	97.5
33 910		
33 911		

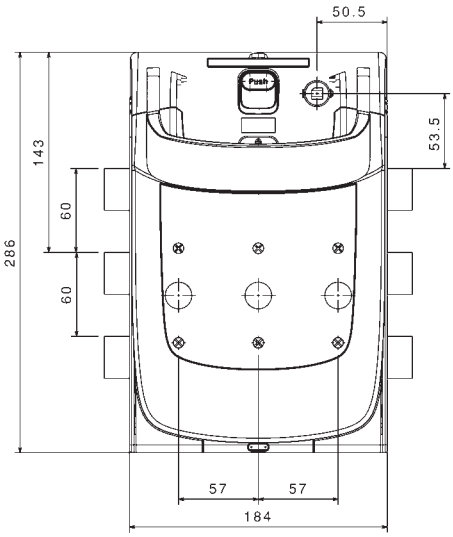

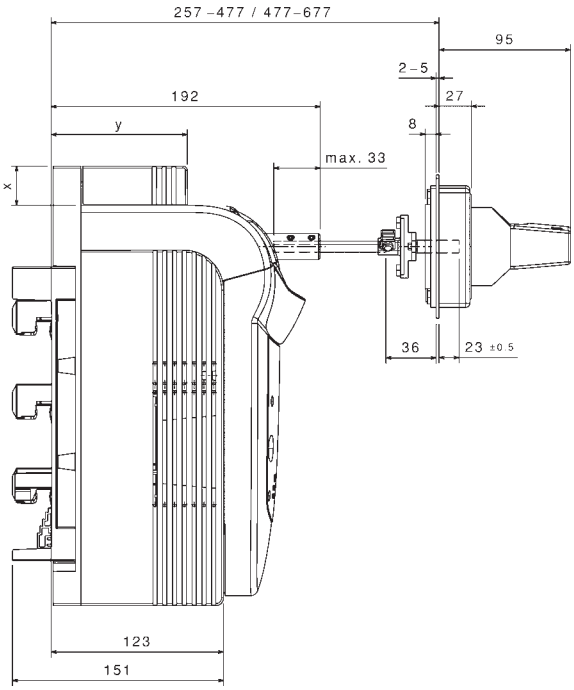

33 234

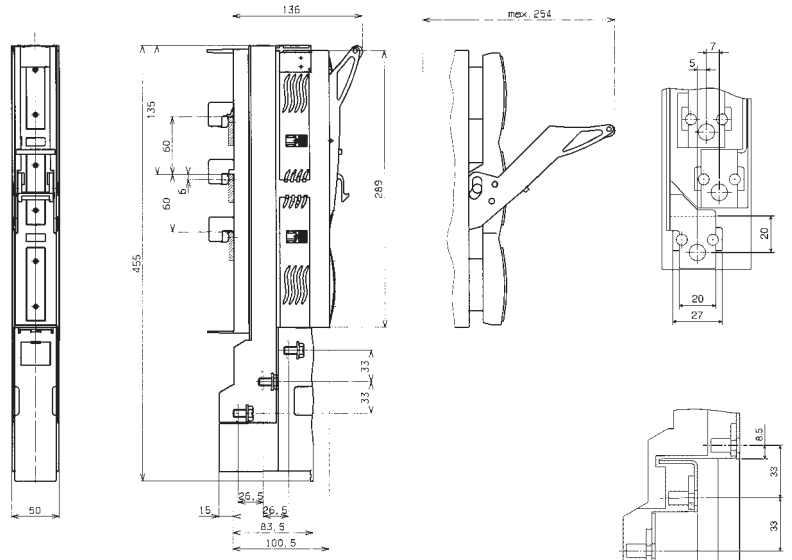

33 285

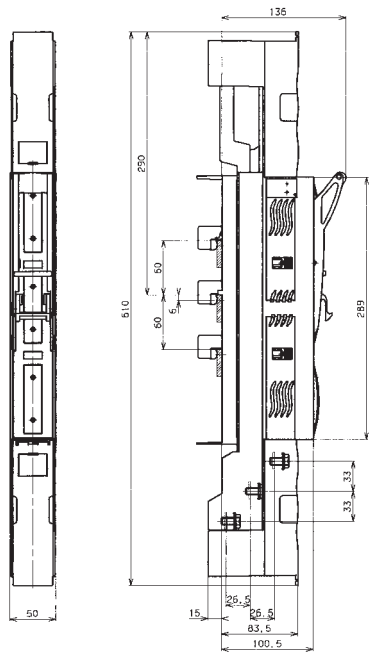

NH fuse switch disconnector with electronic fuse monitoring

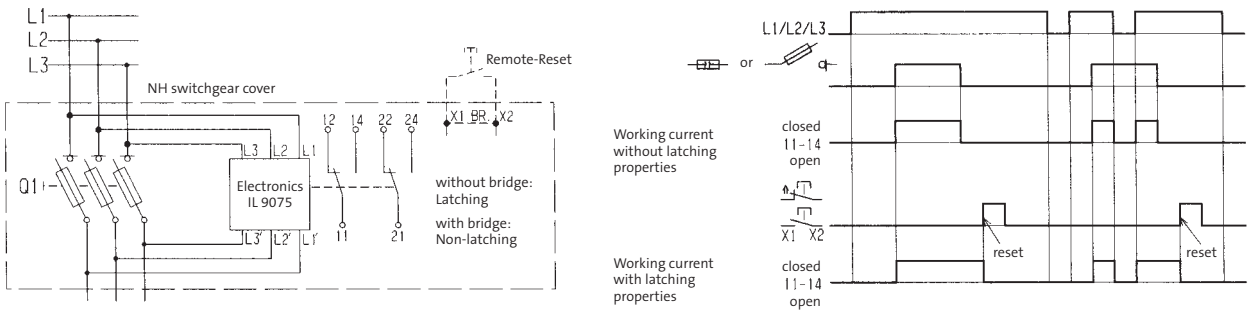

01 223
01 224
01 225
01 226
01 250
01 395
01 396
01 609

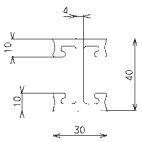

01 190
01 229
01 249
01 397
01 398
01 608
01 831
01 838

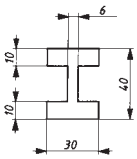

01 187
01 188
01 189
01 227
01 399
01 400

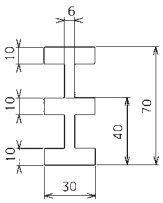

	a	b	c
35 007	488 – 563	300	300
35 006	688 – 763	300	300
35 005	488 – 563	300	300
35 004	688 – 763	300	300
35 015	488 – 563	300	300
35 016	688 – 763	300	300
35 034	688 – 763	300	300

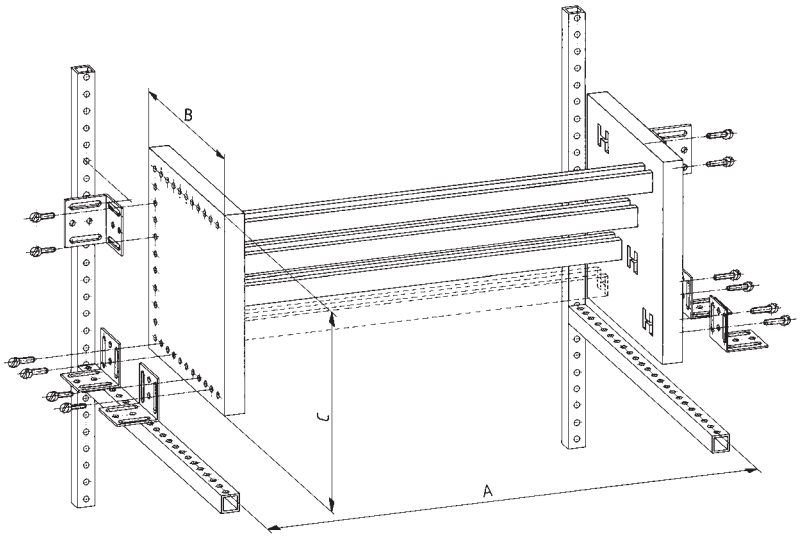

35 008

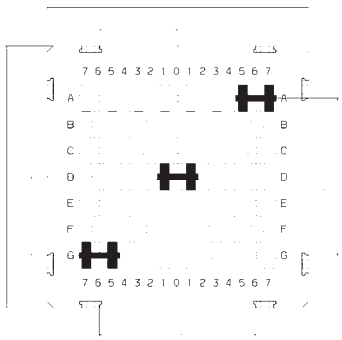

35 009

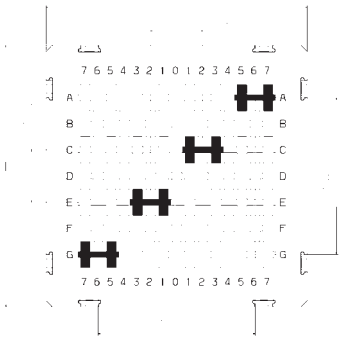

01 369

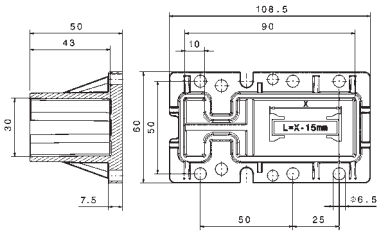

01 377
01 378
01 610

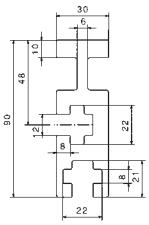

01 379

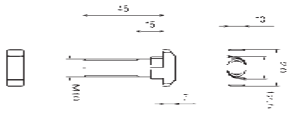

01 380

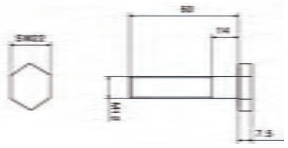

01 479

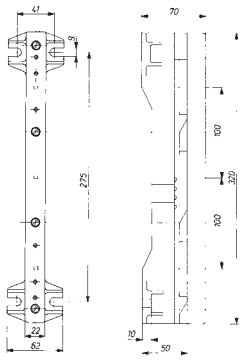

01 254

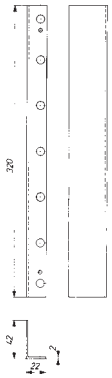

01 230

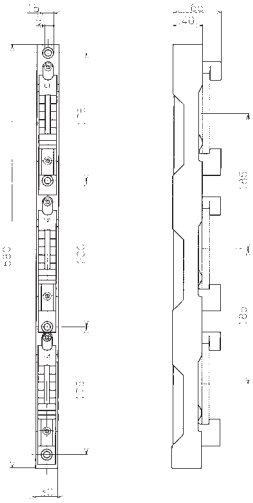

33 341

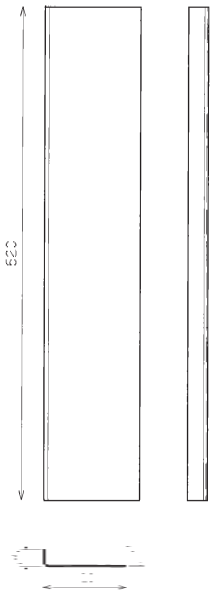

	a	b
01 092	30	48
01 094	30	48
01 032	40	58
01 033	50	68
01 034	60	78

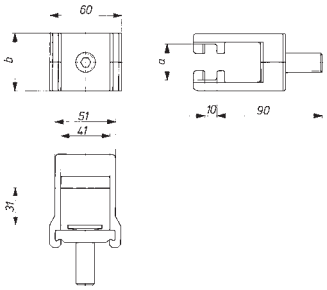

32 001

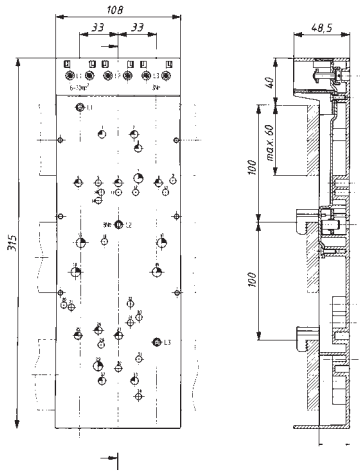

	a	b	c	d	h
01 206	20	40	40	60	20
01 616	32	40	50	60	20
01 207	32	50	50	70	20
01 218	40	63	60	82	20
01 617	50	63	70	82	20
01 222	40	80			30

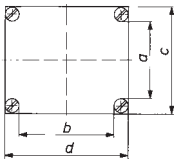

	a	b	c	d	e	f	g	max. h
01 047	42	38	37	47	23.5	15	27.5	55
01 514	32	29.5	29	36	20.5	12	24	42
01 512	24	17.5	19.5	24.5	11.5	9	23	30

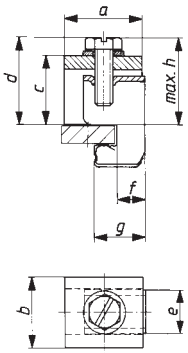

	a	b	c	d	e	g	h	k	Ø l	m	n	0	x
03 369	35	102	28	60	86	70	70	57					35
03 370	35	102	28	60	86	70	70	57					35
03 384	60	175	41	84	110	106	90	86					60
03 599	65	193	40	92	113	118	87	98					65
03 587	35	102	28	60	86	70	70	57	8.5				35
03 601	60	175	41	84	110	106	90	86	6.5	10	9	10	60
03 795	65	193	40	92	113	118	87	98	8.5	7	5	18	65
03 790	80	198	40	93	133	123	123	98	8.5	7	5	18	80

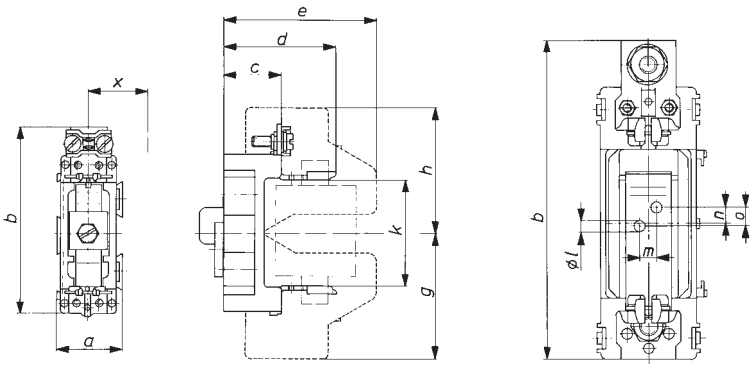

01 742

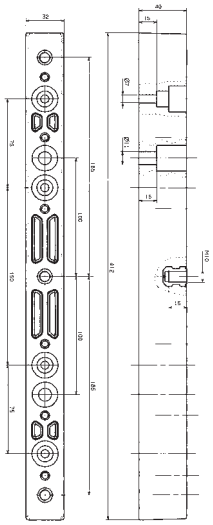

33 384

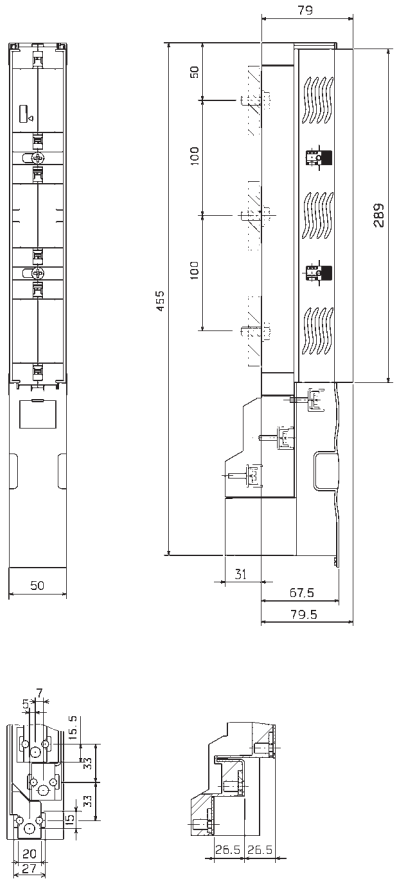

33 235

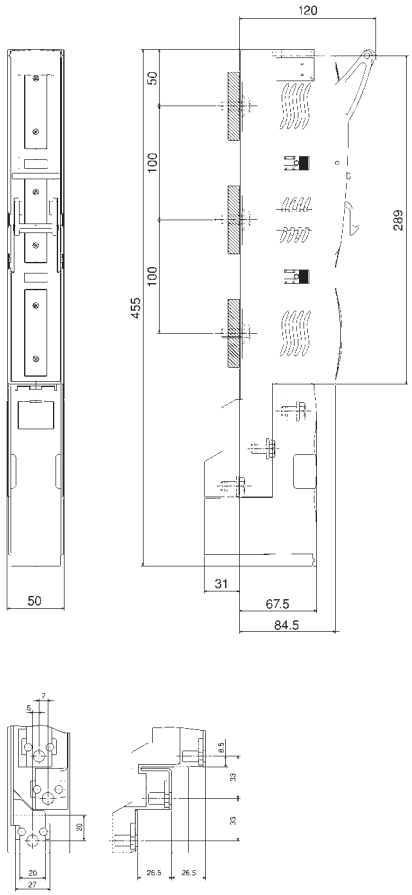

33 238
33 235

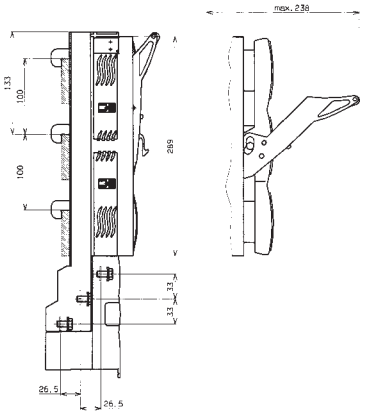

33 286

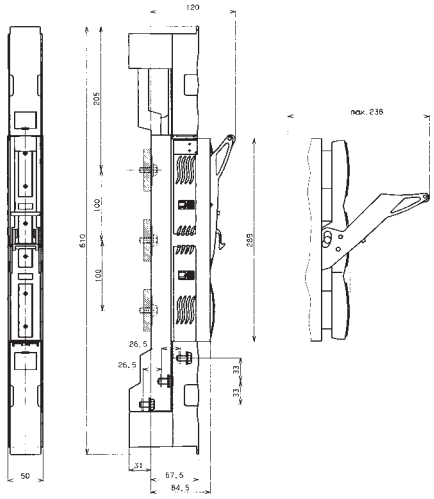

33 236
33 235

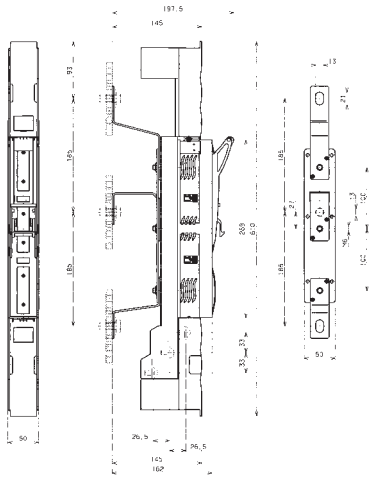

33 237
33 235

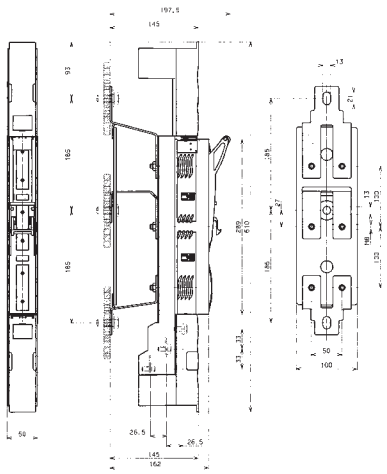

33 282
33 235

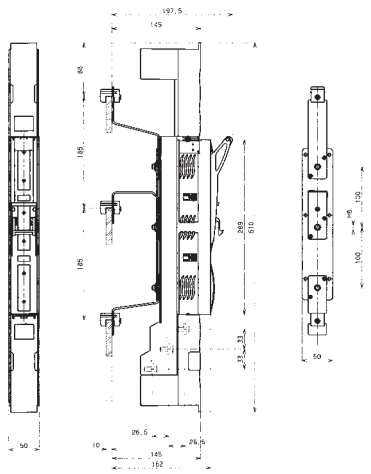

33 087
33 088
33 089

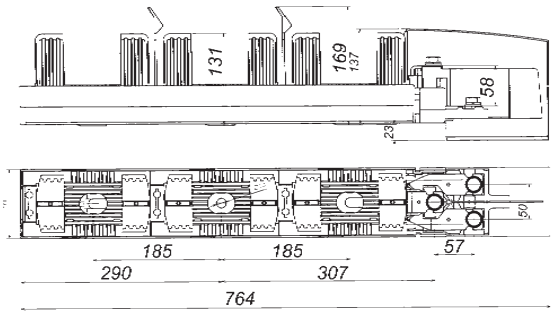

33 097	33 243
33 098	33 244
33 099	33 245

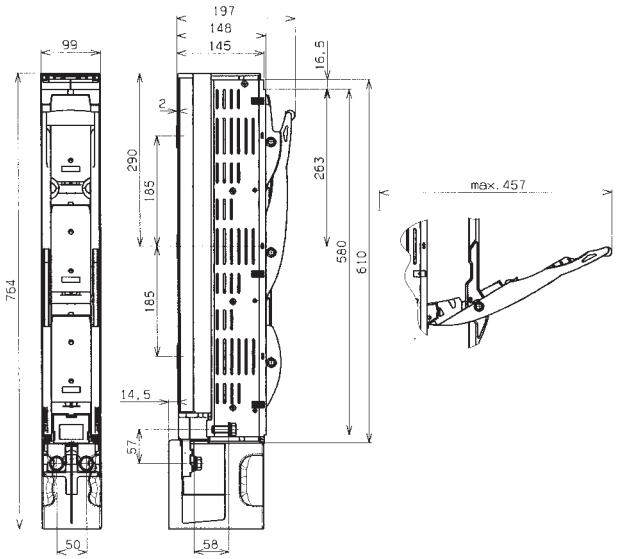

33 093
33 094
33 095

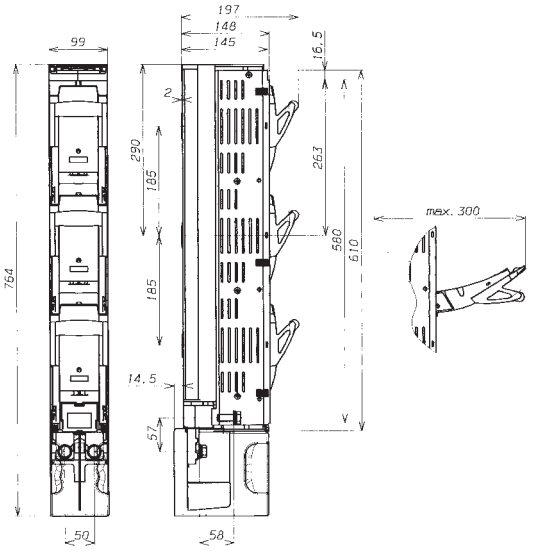

33 287
33 288
33 289

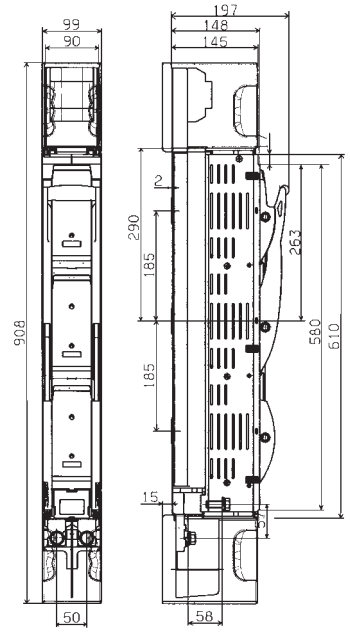

33 321

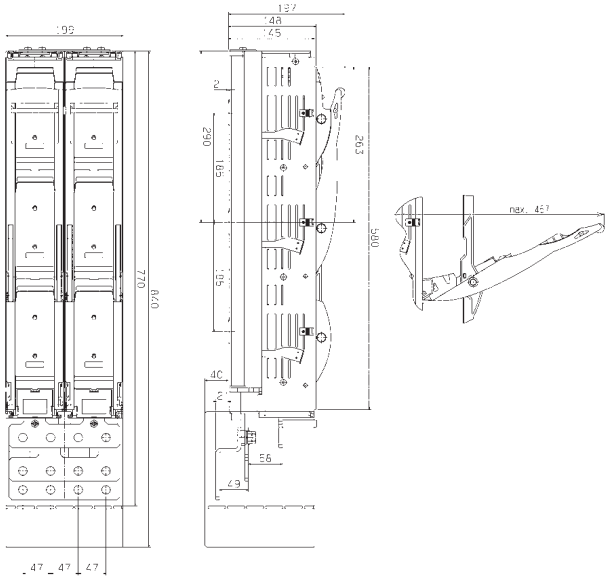

33 093	33 099
33 094	33 287
33 095	33 288
33 097	33 289
33 098	

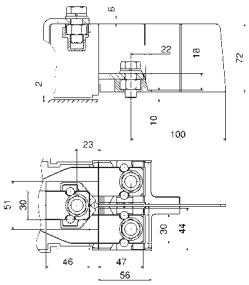

31 307 – 31 308
31 313 – 31 315
31 556
31 557

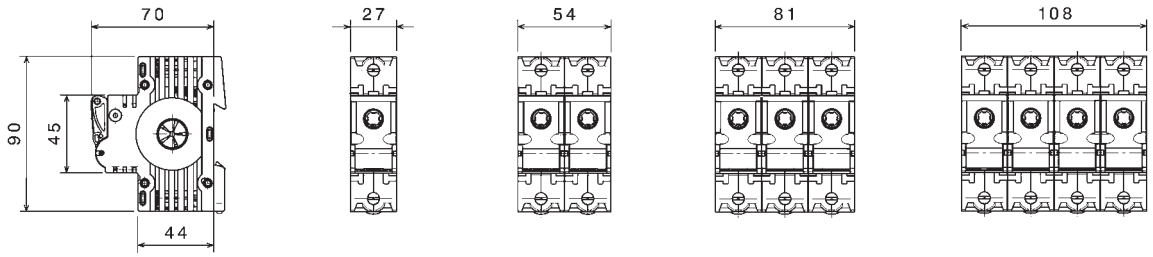

31 286

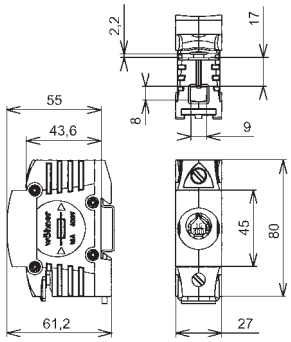

31 293

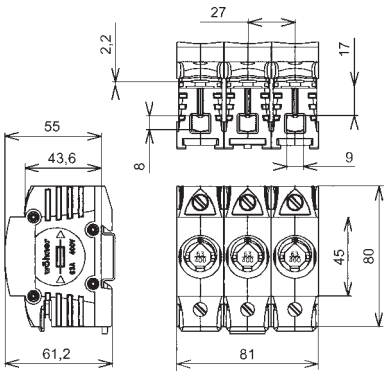

31 173

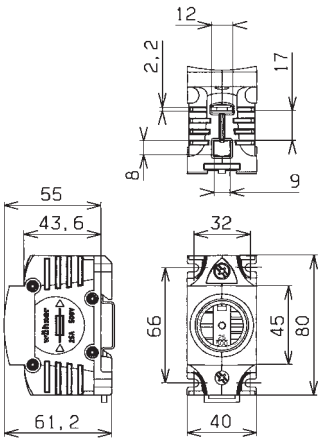

31 175
31 176

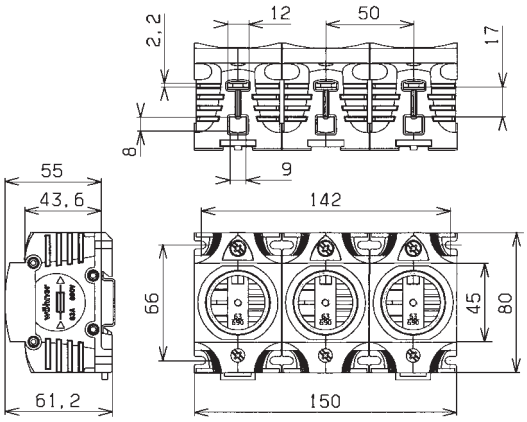

31 301	
31 302	
31 303	
31 306	

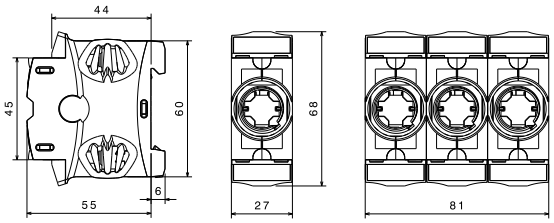

	a	b	c	d
01 103	E 14	26	9	29
31 005	E 14	22.5	8.5	29.5
01 104	E 18	25	9.5	30
31 006	E 18	22.5	8.5	29.5
01 098	E 27	38	11.5	36
31 098	E 27	32.5	11.5	41
01 100	E 33	47	12.5	45
31 100	E 33	44	12.5	42

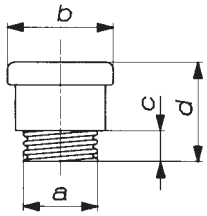

	a	b	c	d	e	f
01 198	34	28	57	21	6.5	4
01 228	34	28	75	21	6.5	4
31 028	17	26	37	20	6.5	3
31 029	17	26	49	20	6.5	3
31 085	20	26	52	17	6.5	3
31 103	13	17	45	18	4.3	2
31 157	18	17	50	13	4	2
31 550	41	29	60	17	6.8	3

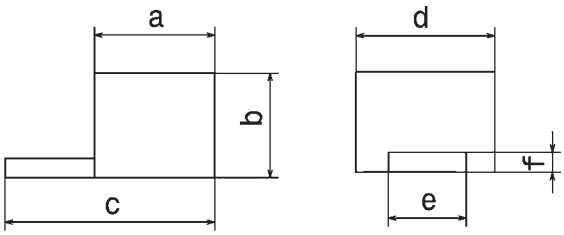

	a	b	Poles	Division
31 012	18	15	3	27
31 014	5	14	1	27
31 024	5	14	1	27
31 056	25	20	3	27
31 057	7	21	1	27
31 101	5	15	1	18
31 102	18	15	3	18
31 309	5	14	1	40
31 310	18	15	3	40
31 311	5	14	1	50
31 312	18	15	3	50
31 548	5	15	1	18
31 549	23	22	3	18

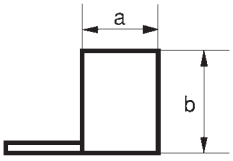

31 555

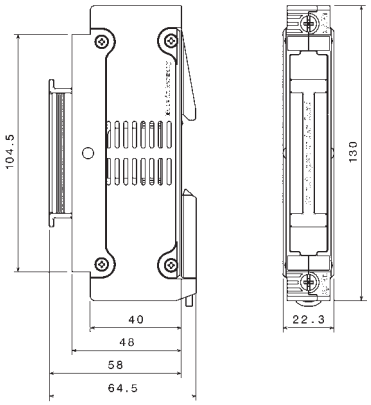

31 105 – 31 114 31 130 – 31 133 31 233 31 258 31 273 – 31 277 31 295 – 31 300 31 929 – 31 930 31 971 31 973

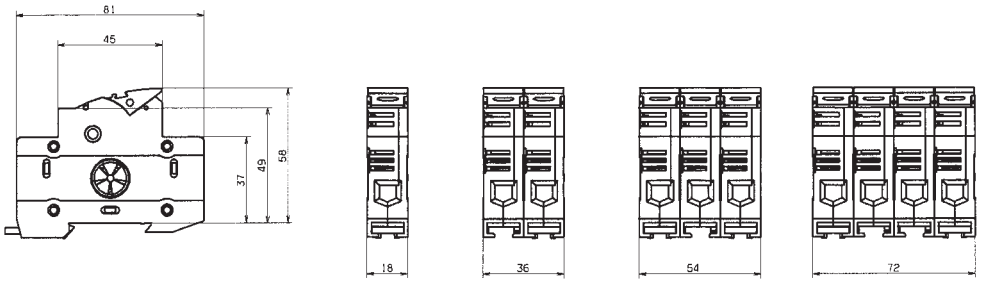

31 115 – 31 119 31 135 – 31 138 31 168 31 278 – 31 280

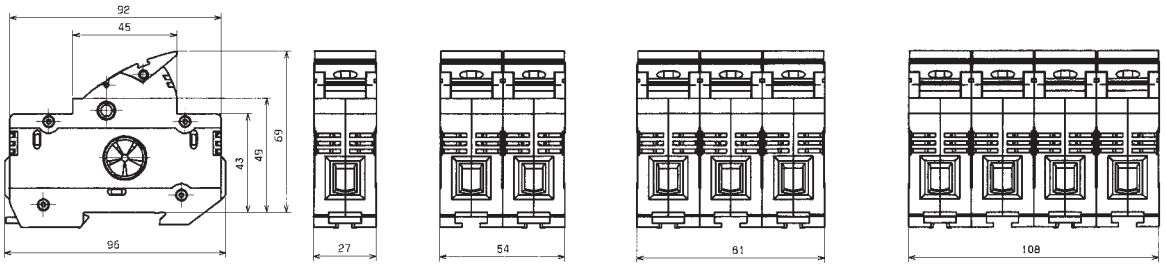

31 120 – 31 124 31 140 – 31 143 31 171 31 281 – 31 283

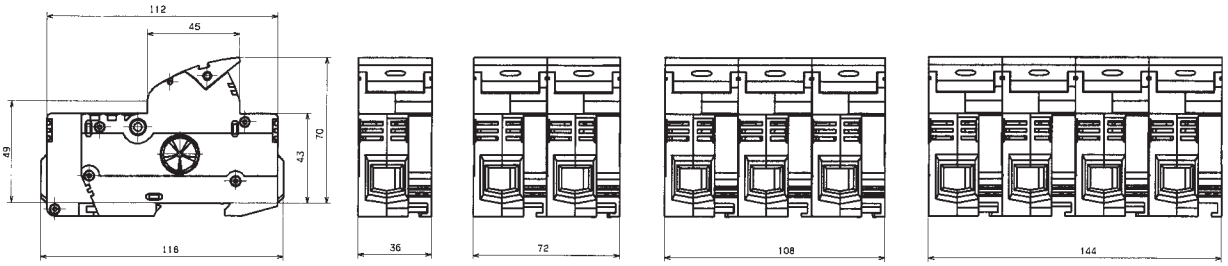

	a	b	c	d
31 940	27			96
31 941			81	96
31 942	36			118
31 943			108	118
31 957		72		118
31 972		54		96

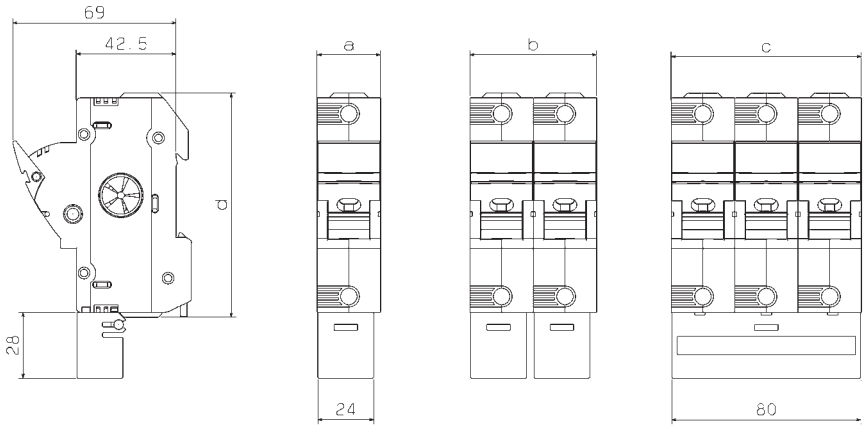

31 284
31 285
31 287
31 932
31 933
31 934

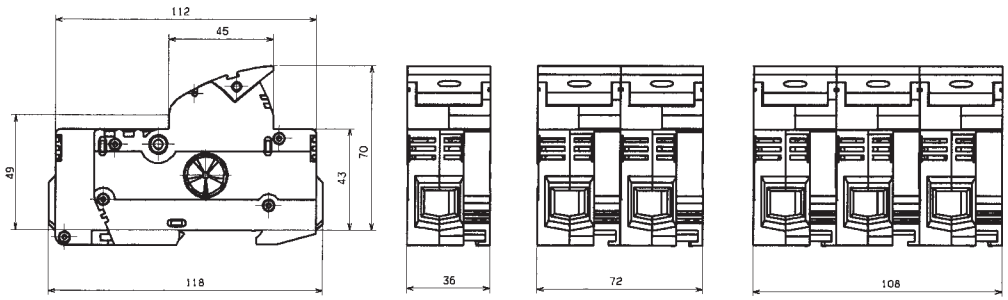

31 920 – 31 925

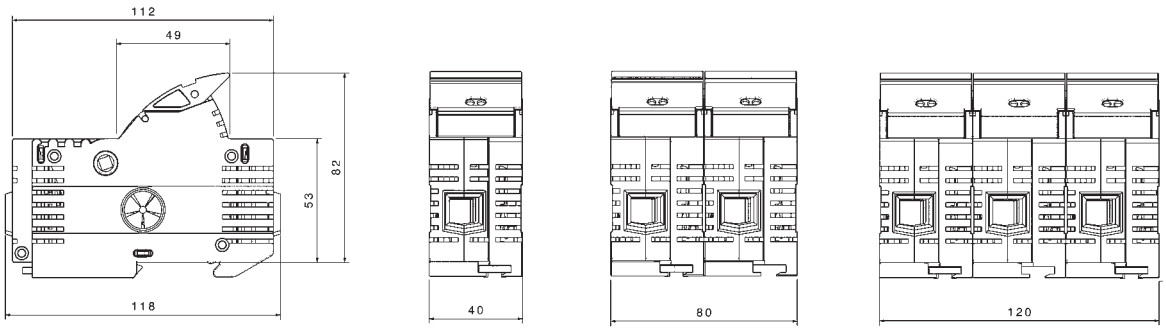

33 408

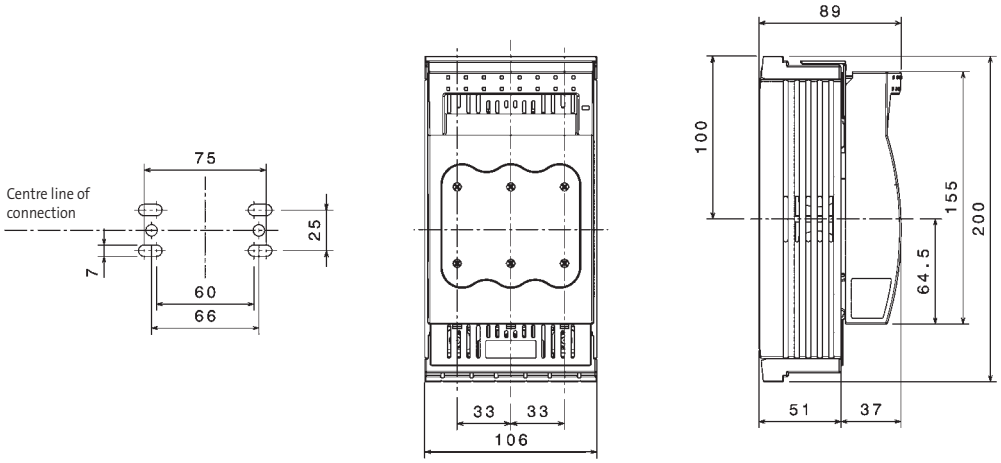

33 409

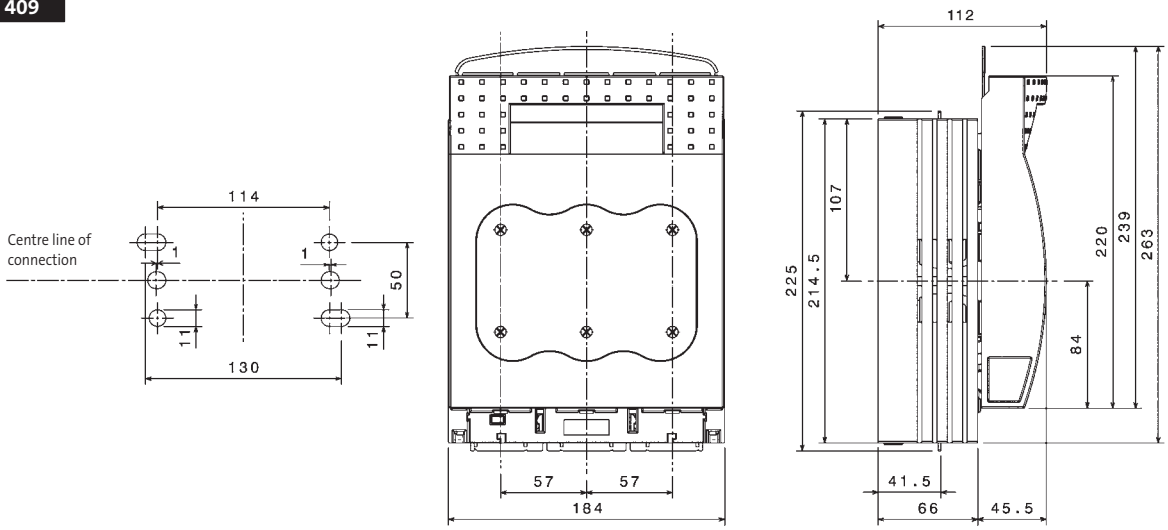

	a	b	c	d	e	f	l	p	q	x
33 308	256	267	114	94	285	20	121.5	136.5	139	81

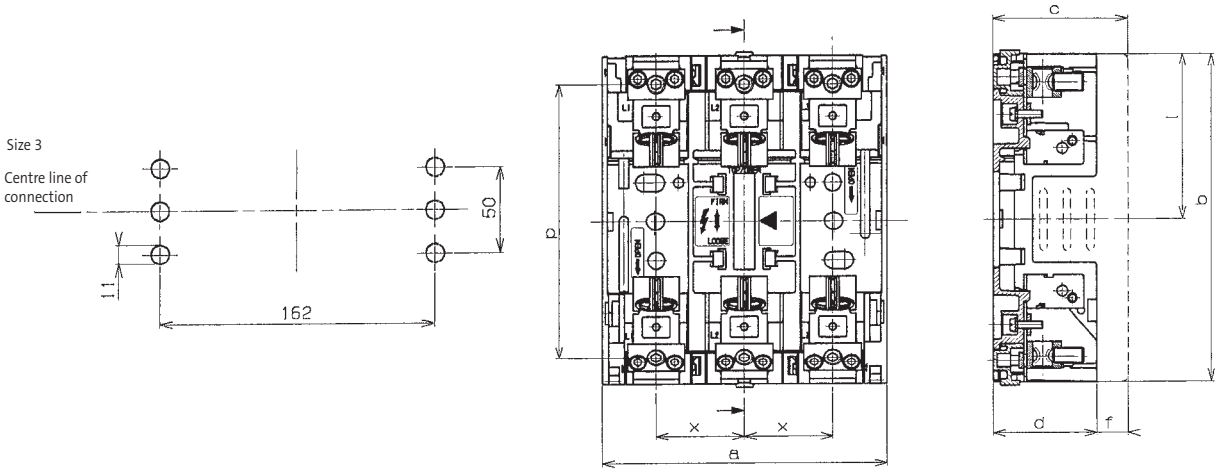

03 290

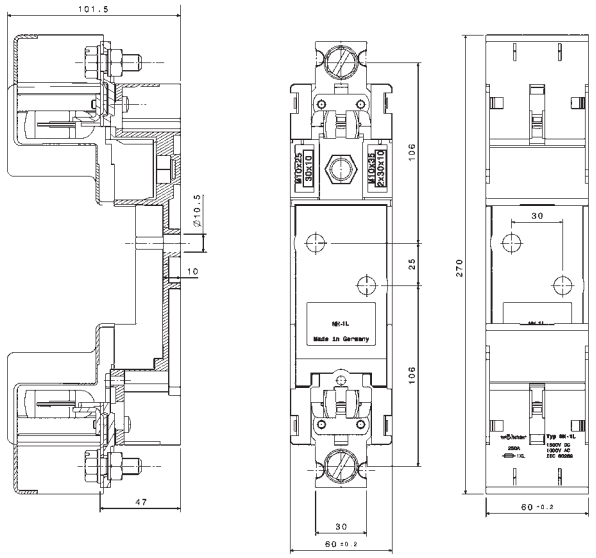

03 289

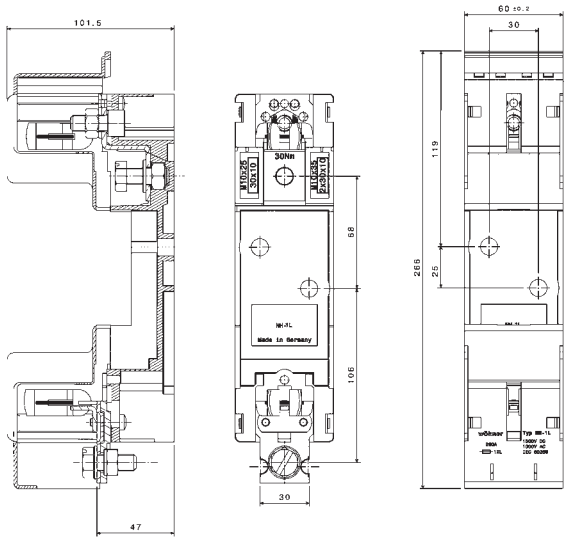

	a	b	c	d	e	f	g	h	k	l	x	m	n
03 350	35.3	120	28	58	88		50	50	57	145			25
03 351	97	120	28	58	88		50	50	57	145	32	64	25
03 354	35.3	120	28	58	88		50	50	57	145			25
03 355	97	120	28	58	88		50	50	57	145	32	64	25
03 749	97	120	28	58	88	62	50	50	57	147	32	64	25
03 758	35.3	120	28	58	88	62	50	50	57	147			25
03 759	97	120	28	58	88	62	50	50	57	147	32	64	25
03 760	35.3	120	28	58	88	62	50	50	57	147			25
03 761	97	120	28	58	88	62	50	50	57	147	32	64	25
03 762	60	200	37	80	110	89	87.5	87.5	83	205		30	25
03 763	180	200	37	80	110	89	87.5	87.5	83	205	60	150	25
03 764	60	200	37	80	110	89	87.5	87.5	83	205		30	25
03 765	180	200	37	80	110	89	87.5	87.5	83	205	60	150	25
03 766	64	232	40	98	121	104	100	100	82	237		30	25
03 767	194	232	40	98	121	104	100	100	82	237	65	160	25
03 768	80	232	40	99	133.5	105	105	105	82	247		30	25
03 769	240	232	40	99	133.5	105	105	105	82	247	80	190	25

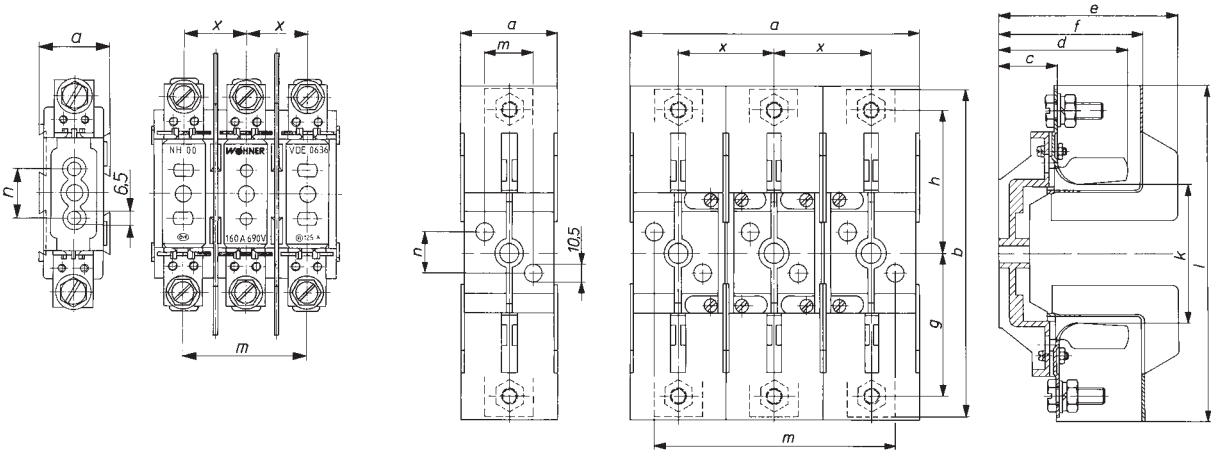

33 217

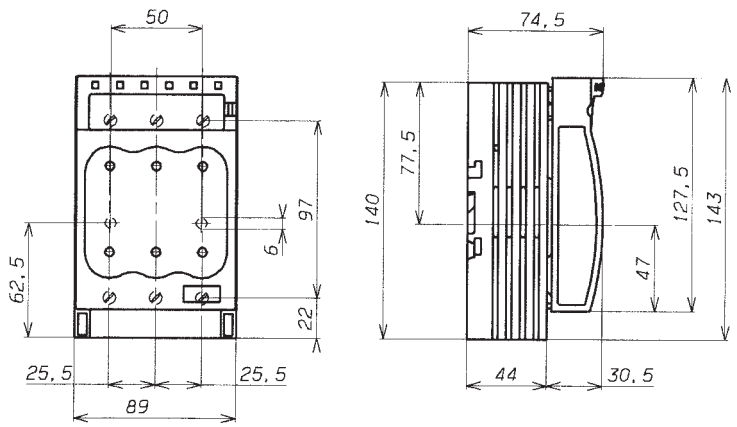

	a	b	c	d	x
79 811	105	34	46	22	33
33 142	182.5	68	65	33	57
33 143	208.5	51.5	79	43	65
33 144	254	48	93.5	43	81

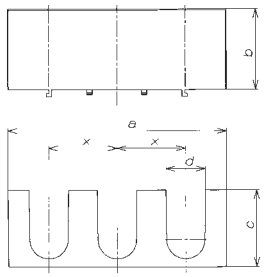

	Size	a	b	c	d	f	g	h	k	l	m	o	p	q	r	x
33 221	00	106	176	82.5	45	37	60	155	22	70	151	206	101	17	2xM5	33
33 222	00	106	176	82.5	45	37	60	155	22	70	151	206	115	17	M8	33

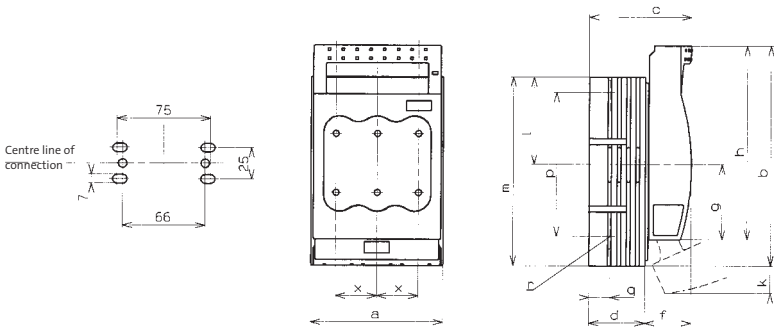

33 156

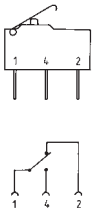

	Size	a	b	c	d	f	g	h	k	l	m	o	p	q	r	x
33 199	00	106	200	82.5	45	37	60	155	–	100	181	206	101	17	2xM5	33
33 200	00	106	200	82.5	45	37	60	155	–	100	181	206	115	17	M8	33
33 207	00	106	200	157	45	112	60	155	64	100	181	206	101	17	2xM5	33
33 208	00	106	200	157	45	112	60	155	64	100	181	206	115	17	M8	33
33 328	00	106	200	122	45	77	60	155	35	100	181	206	101	17	2xM5	33
33 329	00	106	200	122	45	77	60	155	35	100	181	206	115	17	M8	33

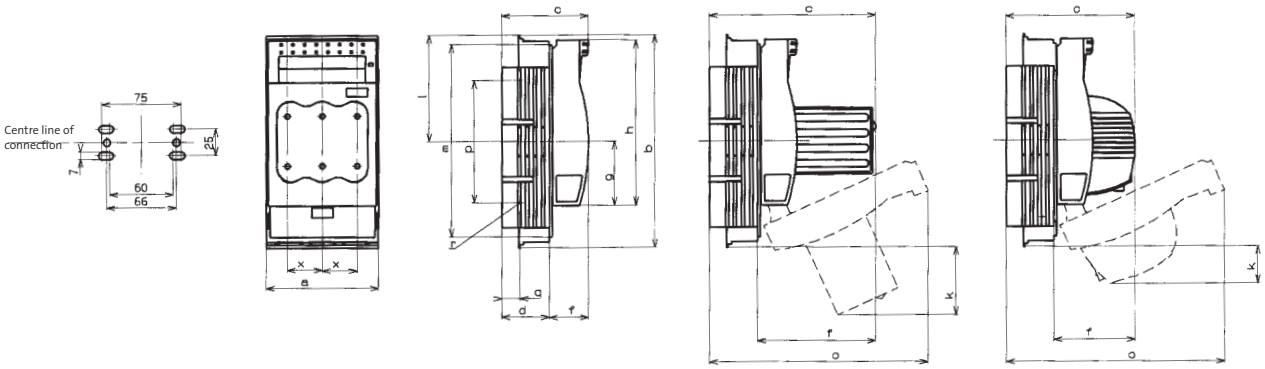

	Size	a	b	c	d	e	f	g	h	l	m	p	q	r	x
33 201	1	184	243	111.5	66	220	45.5	84	220	107	214.5	185	21.5	M10	57
33 202	2	210	288	128	80	–	48	92	249	124	255	210	25	M10	65
33 203	3	256	300	142.5	94.5	–	48	98.5	259	127.5	267	210	30	M12	81
33 204	4 a	378	352	233	151	–	75	104	256	192	352	–	39	2xM12	126
33 149	1	184	243	186.5	66	220	120.5	84	220	107	214.5	185	21.5	M10	57
33 150	2	210	288	203	80	–	123	92	249	124	255	210	25	M10	65
33 151	3	256	300	217.5	94.5	–	123	98.5	259	127.5	267	210	30	M12	81
33 330	1	184	243	152	66	220	86	84	220	107	214.5	185	21.5	M10	57
33 331	2	210	288	168.5	80	–	88.5	92	249	124	255	210	25	M10	65
33 332	3	256	300	183	94.5	–	88.5	98.5	259	127.5	267	210	30	M12	81
33 393	1	184	243	111.5	66	220	45.5	84	220	107	214.5	185	21.5	M10	57

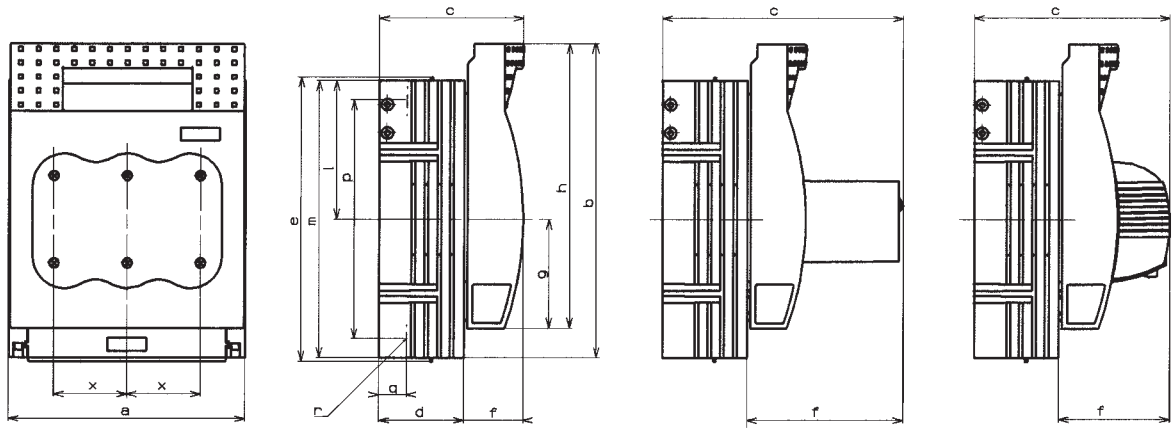

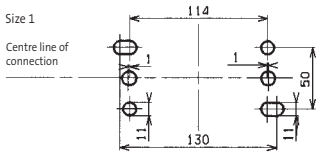

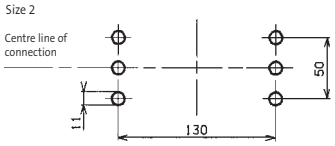

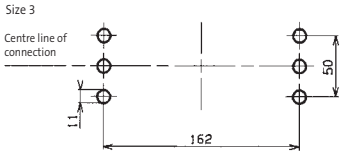

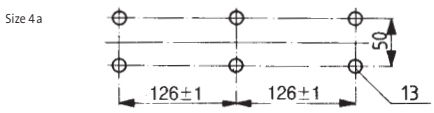

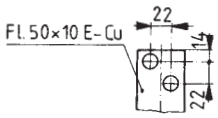

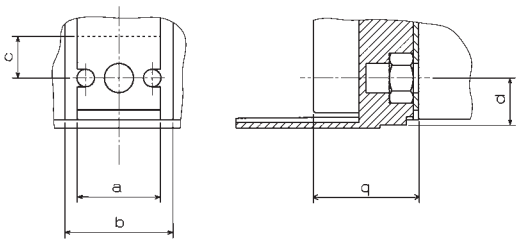

Size	a	b	c	d	q
00	20	25	14.5	10	17
1	30	39	17	17	21
2	33	42	19	19.5	25
3	40	52	20	24	30

NH fuse switch disconnector with electromechanical fuse monitoring

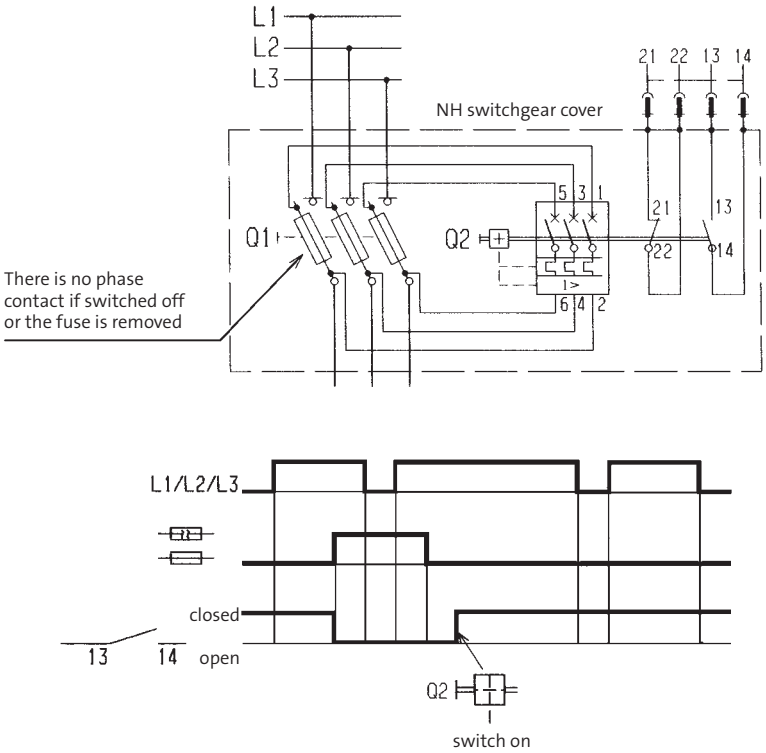

Switch disconnector with NH fuses with electronic fuse monitoring

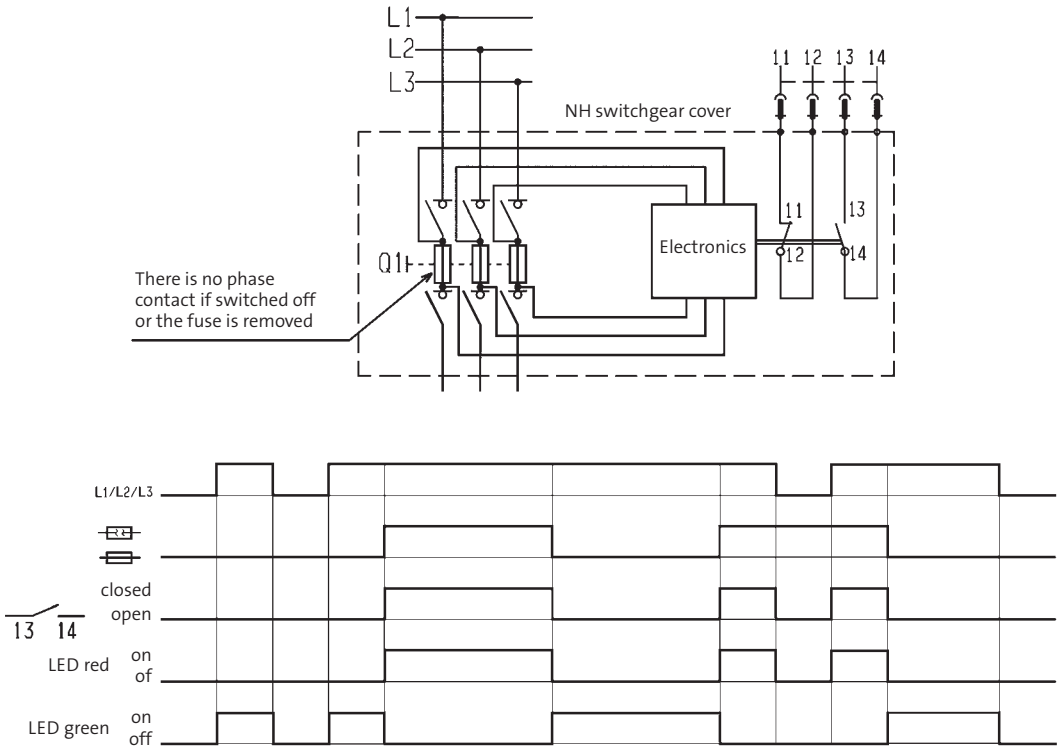

33 502
33 542

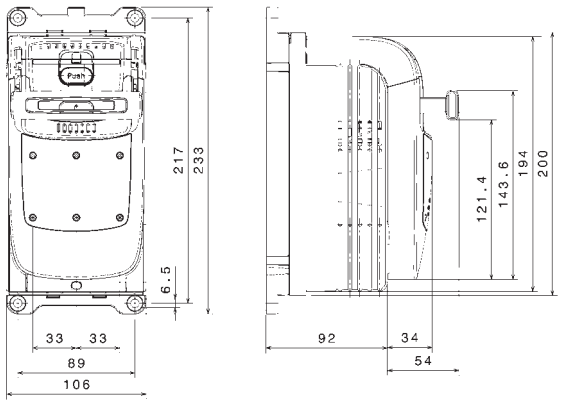

33 505
33 545
33 910
33 911

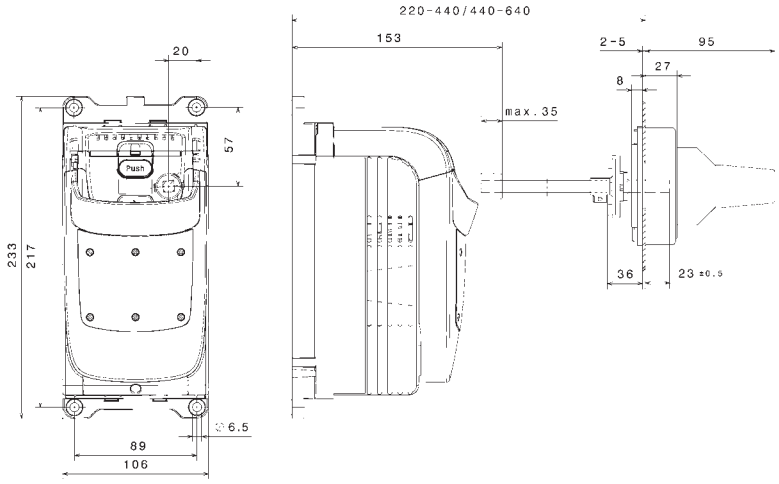

33 910
33 911

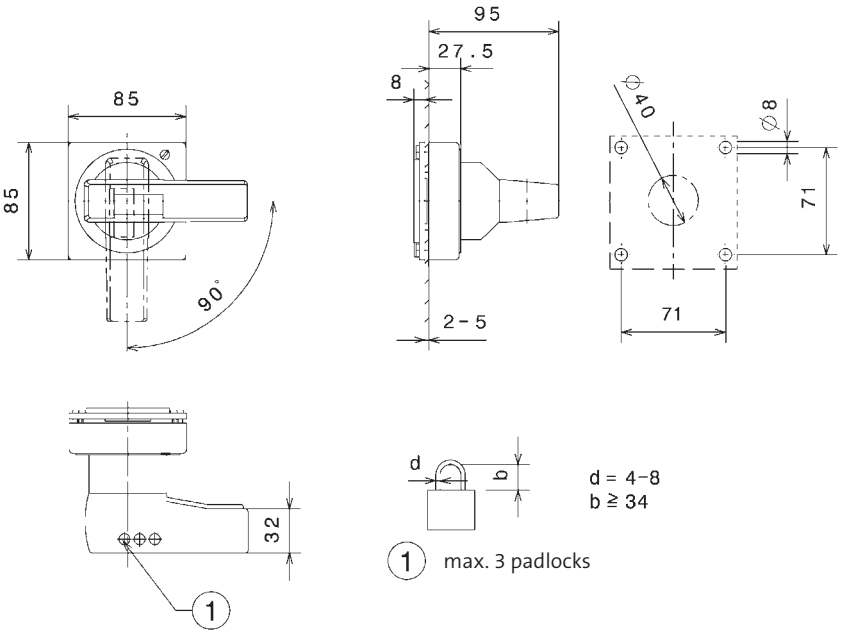

33 512
33 552

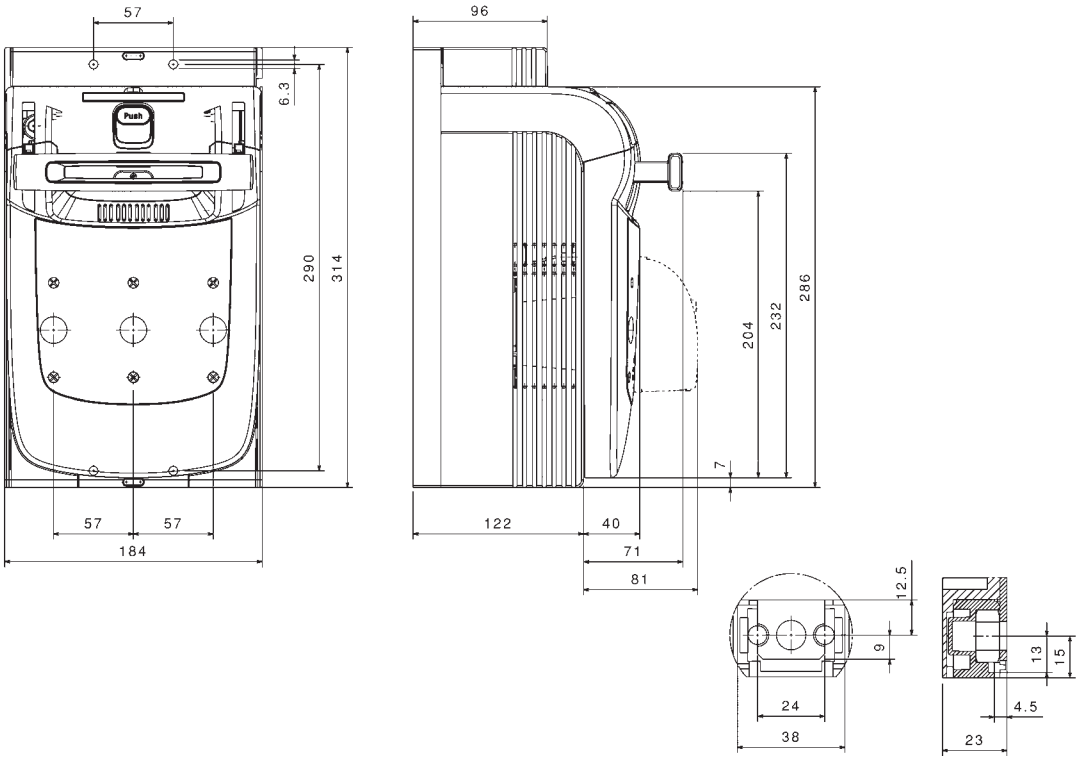

33 515
33 555
33 910
33 911

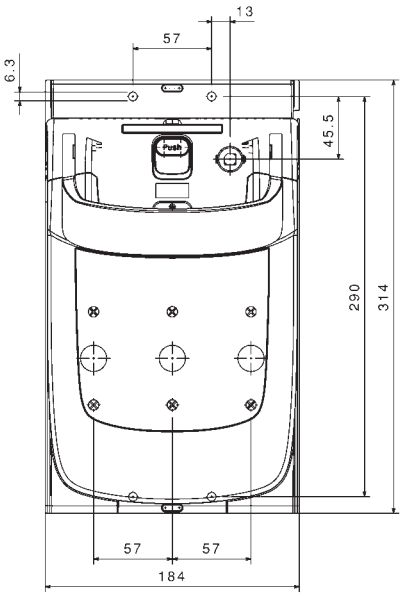

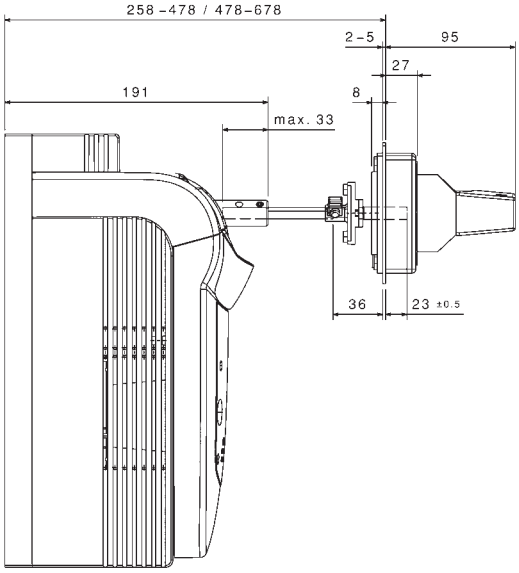

			a	b	c	d	e	f	g	h	i	j	k	l	m	n	o	p	q	r	s
33 333	**33 355**	250 A	158	108	171	153.5	25	11	133	6.5	40	60.5	24	123	46.5	3	157	68	125	128	192
33 334	**33 356**	400 A	232	181.5	270	241.5	30	10.5	208	7	65	88	29	200	73	5	196.5	106.5	180	165	338
33 335	**33 357**	630 A	238	181.5	270	241.5	35	10.5	208	7	65	88	29	200	73	5	196.5	106.5	180	165	338
33 336	**33 358**	800 A	290	217	330	295	40	14	250	9	85	96.5	33.5	237	90	6	237	135	220	198	400

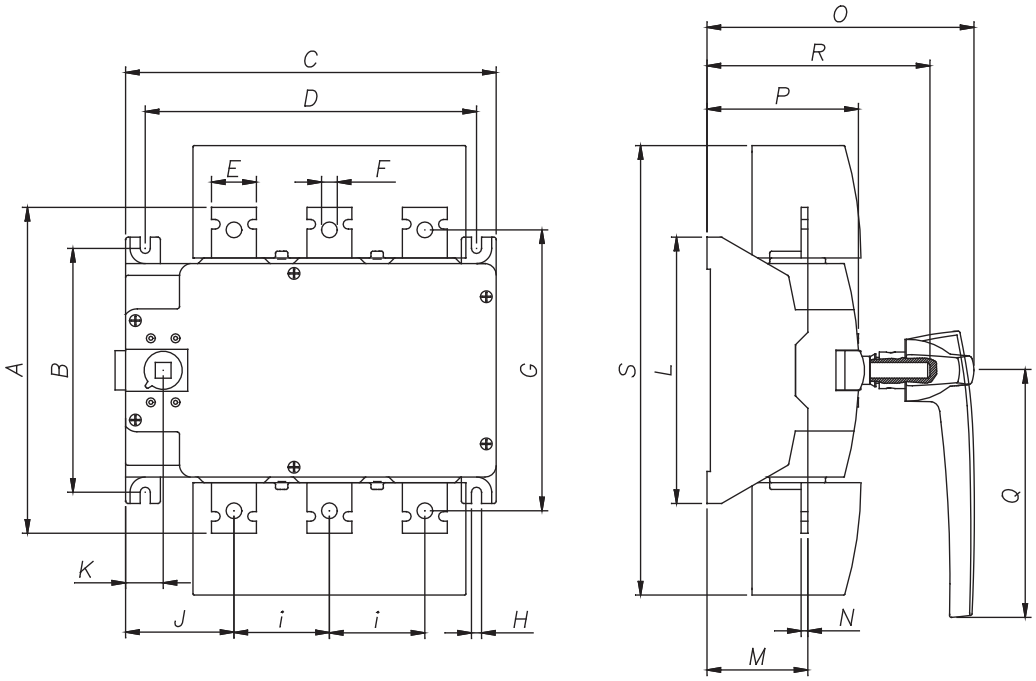

		Size	a	b	c	d	e	f	g	h	i	j	k	l	m	n	o	p	q	r	s	t
33 337	**33 359**	00	158	108	171	153.5	20	9	128	6.5	40	60.5	24	123	46.5	3	195	140	107	125	166	192
33 338	**33 360**	1	232	181.5	270	241.5	30	10.5	208	7	65	88	29	200	73	5	253	196	152.5	180	218	338
33 339	**33 361**	2	238	181.5	270	241.5	35	10.5	208	7	65	88	29	200	73	5	253	196	161	180	218	338
33 340	**33 362**	3	290	217	330	295	40	14	250	9	85	96.5	33.5	237	90	6	302	238.5	200	220	262	400

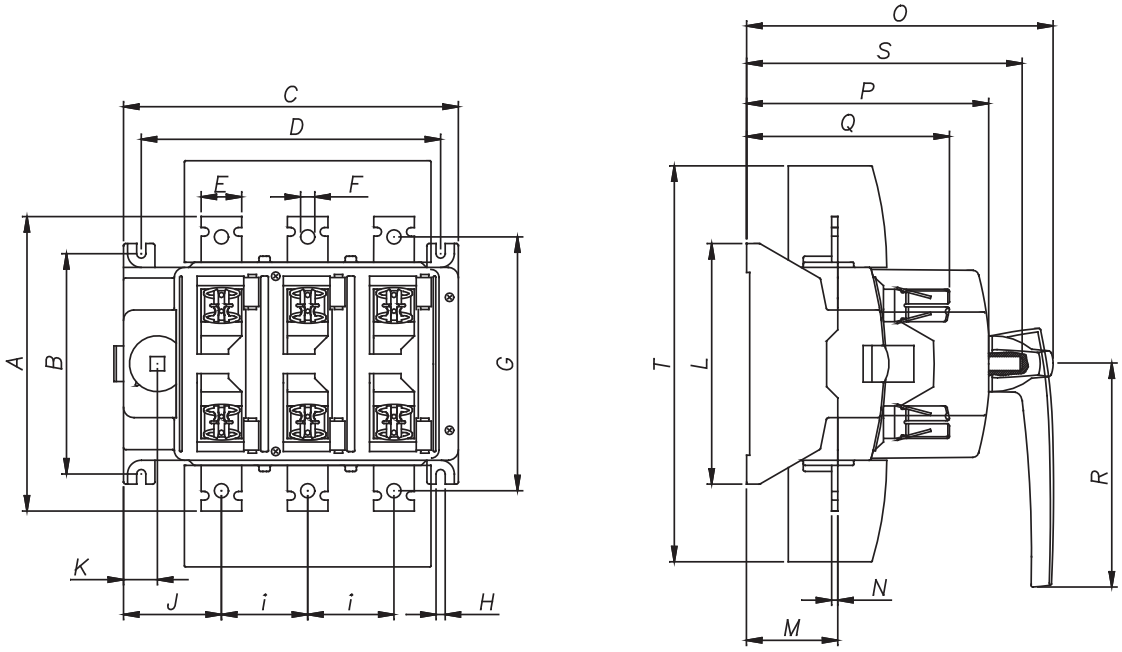

	a	b	c	d	e	f	g	h	j
LTS 250, LTS-F 160	25	10	80	126	76	61	54	65	30
LTS 400/630, LTS-F 250/400	25	10	80	180	79	61	54	65	30
LTS 800, LTS-F 630	30	14	100	220	90	77	68	83	38

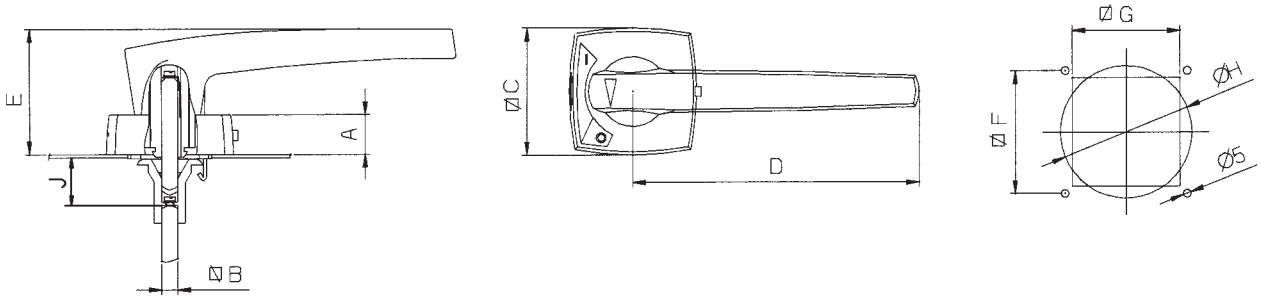

	a	b	c	d	e	f
05 779	20	M 6	17	15	5	6
05 780	30	M 6	30	26	6	8
05 781	35	M 6	32	28	8	10
05 782	35	M 8	32	28	10	12
05 783	40	M 8	40	35	10	12
05 784	40	M 10	40	35	12	14
05 785	45	M 6	46	38	8	10
05 786	45	M 8	46	38	10	12
05 787	45	M 10	46	38	12	14
05 788	50	M 10	36	29	14	16
05 789	60	M 10	40	35	14	16
05 790	50	M 8	36	29	10	12
05 791	40	M 12	40	35	11	13
05 792	30	M 8	30	26	8	10

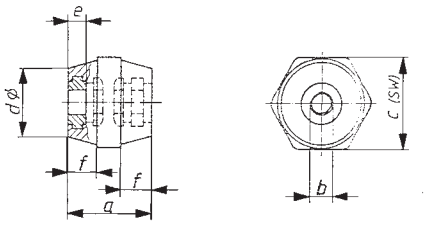

01 138

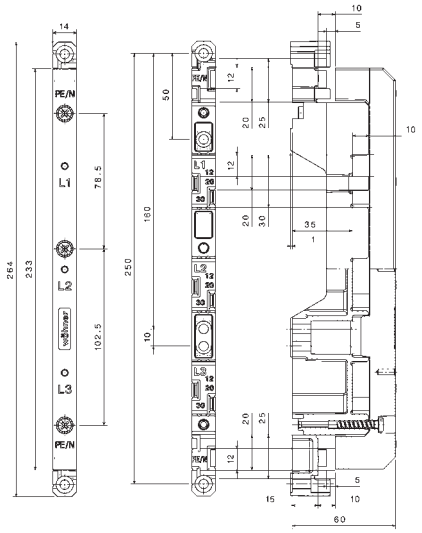

	a	b	c	d	e	f	g	h
05 800	30	M 6	30	26	6	8	M 6	6
05 801	35	M 6	32	25	8	10	M 6	8
05 802	35	M 8	32	30	10	12	M 8	10

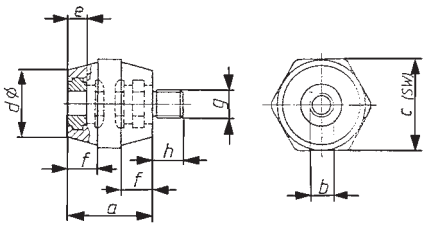

01 888

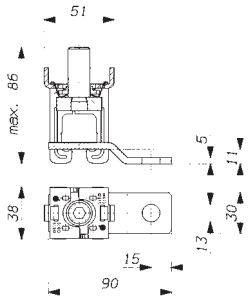

01 890

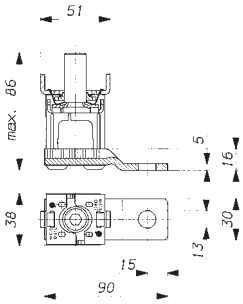

		a	b
03 193	160 A	20.5	60
03 173	160 A	85	125

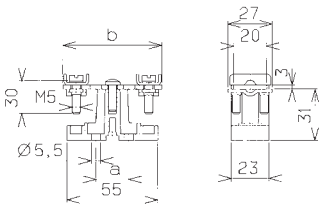

		a	b	c	d
03 195	250 A	25	100	3	M10x20
03 196	250 A	125	198	3	M10x20
03 197	630 A	25	100	5	M12x28
03 198	630 A	125	198	5	M12x28

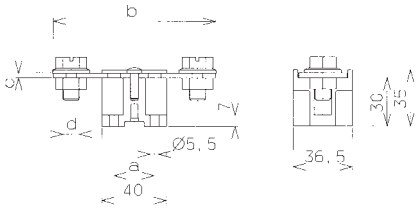

	a	b	c	n
03 620	39	124	27	25
03 519	39	124	27	25
05 188	13	53	38	43
03 668	35	120	28	25
03 757	55	200	40	25
03 213	55	200	40	25

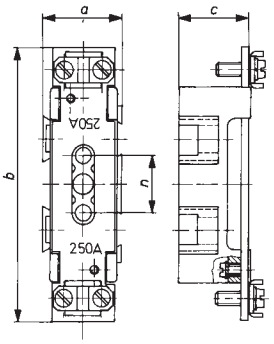

	a	b	c
01 126	52	16	
01 127	78	22.5	26
01 128	104	3	97.5
01 129	156	29	97.5

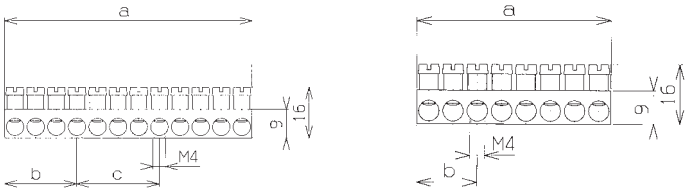

	a	b	clamp
01 926	61.5	48.5	
01 927	124	111	1
01 928	186.5	173.5	2
01 929	249	236	3
01 930	311.5	298.5	4
01 931	374	361	5
01 932	1000		

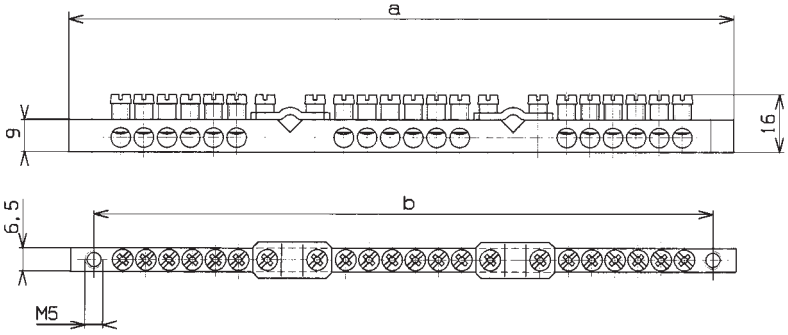

	a
02 603	60.6
02 604	80.2
02 605	99.8
02 606	80.2
02 607	99.8
02 614	80.2
02 615	80.2

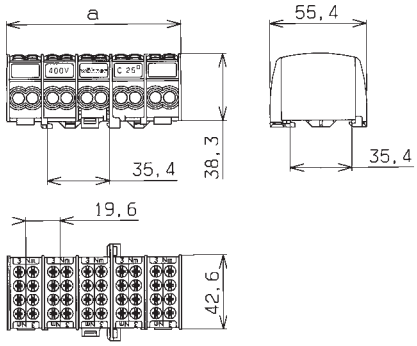

	a
02 218	95
02 219	118
02 264	118
02 225	32.5
02 226	32.5
02 227	62
02 228	62
02 229	62
02 230	62
02 231	121
02 232	121
02 233	121
02 234	150.5
02 235	150.5
02 237	150.5
02 238	150.5

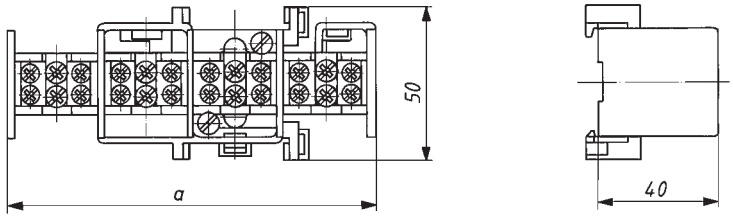

	a	b	c	d	m	n
02 242	40	44	40	44		
02 243	40	44	40	44		
02 244	77	44	40	44		
02 246	77	44	40	44		
02 505	154.5	60	40	46	74	48
02 544	192	60	40	46	74	48
02 538	192	60	40	46	74	48
02 521	40	44	40	44		
02 526	40	44	40	44		
02 527	77	44	40	44		
02 517	154.5	60	40	46	74	48

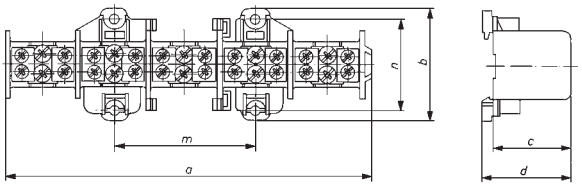

78 491		

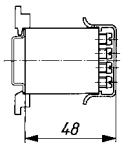

02 619

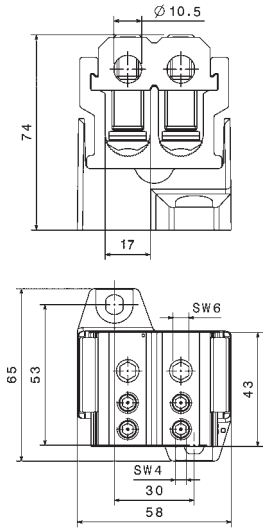

02 621

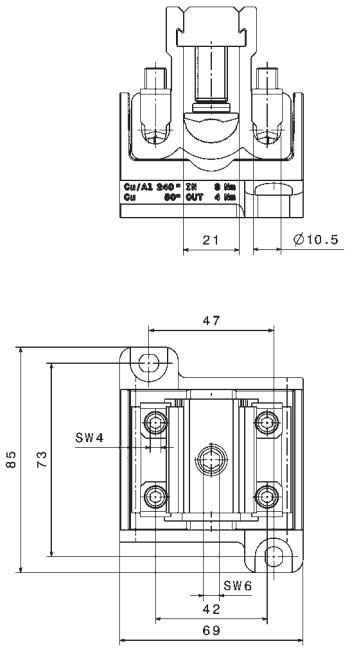

Appendix

Co-operation

Terms of Sale and Delivery of Wöhner GmbH & Co. KG

I. General

1. Diverging and/or supplementary conditions of the Customer not expressly acknowledged by us in writing are not binding upon us, even if they are not expressly opposed by us.

2. Orders shall not be deemed as accepted but upon confirmation by us or delivery having been made.

II. Delivery

1. We aim high at complying as punctual as possible with the delivery dates confirmed by us. Should such compliance with the delivery time be impossible due to circumstances beyond our control, such as natural disasters, war, or measures of industrial action with us or our subcontractors, a reasonable extension of the delivery time sets in. Should such impediments continue to exist for more than 2 months, each contracting party is entitled to withdrawal.

2. Partial delivery is possible. With manufacture to Customer's specifications, delivery deviations of 10% more/less are permissible. Wöhner reserves the right of modifications, especially of the given values, measures and weights, as well as of constructional modifications. Drawings are not binding.

3. In case of delay in delivery on our side and an additional period of time of reasonable length having been granted to us by the Customer, and with such period having been elapsed, the Customer may either withdraw from the Contract or – inasmuch as he shows satisfactorily that he has suffered a loss by this – demand for each terminated week of such delay a compensation of 0,5% but all in all not more than 5% of the purchase price of such delayed delivery. Any further claims of the Customer in all cases of delayed delivery are excluded, even in case of expiration of an additional period of time that may have been granted to us. To claims for compensation apply also par. IX.1 pages 2 and 3 and IX.4.

4. Returns accepted by our firm upon prior agreement confirmed in writing are reimbursed with 90% of the invoice value. Returns are not possible but within the first 14 days following delivery and in closed original packing. With returns, packing is not reimbursed. With returns of a total value of less than 250,– Euros a handling fee of 25,– Euros net is charged.

III. Prices, Dispatch, Liability for Damage to Goods in Transit

1. Accounting is done at the list prices, allowances, and terms valid at the day of delivery. Bullion surcharges are charged separately at the quotation of the day on the day of the order received. Our prices are based on a price of 200.– € per 100kg of copper, 185.– € per 100kg of brass and 180.– € per kg of silver.

2. All list and offer prices are net, without the statutory VAT, without packing and ex works. Orders under 100.– € are charged without any allowance. From 500.– € net on, Wöhner delivers "free domicile, packing extra" and from 1000.– € net on "free domicile, standard packing included". Insurance charges equalling 1% of the net total price are also charged. Basis of these terms is a complete order and the taking of the goods in packing units.
Special wishes of the Customer (e. g. delivery under an address other than that of the Customer, express delivery, special packing, commissioning of a particular forwarder) are taken into account as far as possible. The additional costs resulting therefrom are borne by the Customer.

3. Tool costs paid pro rata by the Customer create no entitlement to the tools, unless otherwise agreed by the parties. They remain the property of the firm of Wöhner. This applies also to the rights in exclusive developments.

4. With dispatch ex works and also in case of partial delivery, risk passes in any event to the Customer, even when in individual cases freight paid delivery was agreed.
With the product being ready for dispatch and its dispatch or taking delivery of being delayed for reasons beyond our control, risk passes to the Customer at the moment of receipt of the advice of readiness for dispatch.

IV. Payments

1. On invoiced amounts received within 14 days upon the invoice date the Customer may deduct 2% discount. Except for that our invoices are payable 30 days upon the invoice date without deduction, unless otherwise individually agreed.

2. According to the statutory regulations, the Customer is in default especially 30 days upon payment being due and receipt of an invoice or an equivalent list of accounts receivable. Payments shall be considered as being made on the day the amount is at our disposal. From the due date on, statutory default interest of 8% above the basic interest rate is charged.

3. Dishonoured cheques or bills of exchange, suspension of payments, and petition in insolvency proceedings against the assets of the Customer make all our claims – also in case of respite – immediately become due.

4. The Customer may only set off such claims that are established uncontested or have become final and absolute.

V. Reservation of Title

1. We reserve full title in the products until payment in full of all accounts receivable under a current business relation.

2. The Customer is obliged to the careful handling of the products. The Customer is obliged to inform us immediately of any attachment of the products by third parties, e. g. in case of seizure, as well as of possible damages to or the destruction of the products. Any change in the possession of the products and the change of his own residence must immediately be communicated to us by the Customer.

3. With the Customer being in breach of contract, especially in case of delay in payment, we are entitled to withdraw from the Contract and to demand the return of the products.

4. The Customer is entitled to resell the products in the ordinary course of business. He already now assigns to us all claims to the size of our invoice amount that accrue to him against a third party through such reselling. We accept this assignment. Upon assignment the Customer is entitled to collect the sum due. We reserve the right to collect the sum due ourselves the moment the Customer does not properly comply with his financial obligations and is in default.

5. The processing and working up of the products by the Customer is always done in our name and on our behalf. Where the products are being worked up with objects not in our possession, we acquire co-ownership in the new article at the ratio of the value of the products delivered by us to the other worked up objects. The same applies when the products are mixed with other objects not in our possession.

VI. Duty to Examine and Notice of Defect

Has the Customer failed to give notice of defect according to § 377 sub-par. 1 HGB / German Commercial Code, which has to be send in writing to our firm within 10 days upon receipt of the products, any recourse of the Customer is excluded, unless such defect is of a kind not recognisable at the time of the examination.

VII. Warranty

1. We warrant the faultlessness corresponding to the respective state of the art. Modifications in construction or design that do not impair neither the functionality nor the value of the product do not represent an imperfection.

2. For the condition of the product only the product description shall basically pass for being agreed on.

3. With the product being defective, of which notification in writing has to be made immediately by the Customer, we shall within a reasonable period of time remove such defect at no cost by our after-sales service or deliver a faultless article (= subsequent performance). We choose in each case under the aspect of reasonableness the adequate kind of subsequent performance. Should subsequent improvement or substitute delivery fail, the Customer may withdraw from the Contract or reduce the purchase price. In case of a substitute delivery or withdrawal we reserve ourselves the assertion of an adequate allowance for use. To claims for damages applies par. IX, any further claims of the customer are excluded.

4. All statutory and contractual claims of the Customer based on a defective product become statute-barred for new products after two years upon handing over. Removal of defects or new delivery are no new beginning of the limitation period. This does not apply where the law provides for periods of time exceeding two years, especially in case of § 479 BGB / German Civil Code (right of recourse). For claims for damages par. IX.3 is applicable.

5. Rights of recourse of the customer against the supplier under § 478 BGB / German Civil Code (recourse of the contractor) do not exist but in so far as the Customer and his buyer have not made any agreements that go beyond the legally fixed claims based on defects and when the article was resold in an unmodified state. Necessary expenses will not be refunded but with the Customer presenting a copy of the proof of purchase of the consumer, a description of defects, and evidence of the necessary expenses.

VIII. Industrial Property Rights / Copyrights

Orders according to drawings, drafts or other indications given to us are executed at Customer's risk regarding patent, industrial design, and trademark rights. Should the execution of such orders interfere with any third party's industrial property rights, the Customer accepts responsibility for any damage incurred to us by such interference.

IX. Other Liabilities

1. Any claims for damages by the Customer for whatsoever cause in law are excluded. This does not apply where obligatory liability is given, e. g. under the German product liability law, or in cases of intent, gross negligence, for personal injury or the breach of essential contractual obligations. Yet, indemnity for breach of essential contractual obligations is limited to a foreseeable contractually inherent damage, as far as it is not a case of intent or gross negligence or liability for personal injury is given.

2. Any other claims against us do not exist, especially no claims for damages and no rights of recourse for non-compliance with the instructions for use or the mounting instructions, or for misuse of the products. Claims for damages and rights of recourse do also not exist for damages arising out of in-expert installation, mounting or repair of our products, or for damages arising during transport after the passing of risk to the Customer. Any intruding action on the product, especially the changing of parts and/or modification of the original Wöhner product exclude liability.

3. Claims for damages for defects become statute-barred one year upon handing over of the product, except for the reproach of gross fault or fraudulent intent, or in case of injuries to health.

4. A reversal of the burden of proof to the prejudice of the Customer is not incidental to the above terms.

X. Place of Performance and Venue

1. Place of performance for all obligations under this contractual relationship is the registered office of Wöhner.

2. Place of venue is – with the Customer being merchant entered in the commercial register – at our choice Coburg or the seat of our respective locally responsible distribution company.

3. For these contractual relations the German Law is applicable to the exclusion of the United Nations Convention on Contracts for the International Sale of Goods (CISG).

Part no.	Amount of copper in kg	Amount of brass in kg	Amount of silver in g	Page	Pack size	
01 008	0.525			2/9, 3/1, 4/6	3	
01 025				2/5	2	
01 026				2/5	10	
01 027	1.068			7/5	1	
01 028	2.136			7/5	1	
01 029	3.560			7/5	1	
01 032	0.189	0.636		4/2, 4/5	3	
01 033	0.226	0.671		4/2, 4/5	3	
01 034	0.261	0.710		4/2, 4/5	3	
01 035	1.324			7/5	1	
01 047	0.251			2/8, 3/2, 4/2, 4/5	6	
01 050	0.694			7/5	1	
01 054	0.384			7/5	1	
01 059				7/10	1	
01 060	4.450			7/5	1	
01 061	14.240			2/9, 3/2, 7/5	1	
01 062	1.068			7/6	1	
01 063	2.136			7/6	1	
01 064	3.560			7/6	1	
01 068				1/1, 2/7	25	
01 069	0.196			2/7, 2/8, 2/9, 3/2, 4/6	3	
01 070	0.235			2/7, 2/9, 3/2, 3/3, 4/6	3	
01 071	0.355			2/7, 2/9, 3/2, 3/3, 4/6	3	
01 075	2.136			7/6	1	
01 076	4.272			7/6	1	
01 083	0.384			7/6	1	
01 084	0.769			7/6	1	
01 089	0.883			7/6	1	
01 090	1.324			7/6	1	
01 091	2.207			7/6	1	
01 092	0.153	0.599		2/9, 4/2, 4/5	3	
01 094		0.800		2/9, 3/1, 4/2	3	
01 095	2.848			7/6	1	
01 096	5.696			7/6	1	
01 097	3.560			7/6	1	
01 098				7/10	20	
01 099	7.120			7/6	1	
01 100				7/10	20	
01 103				7/9	20	
01 104				7/9	20	
01 112	5.000			7/6	1	
01 113	8.900			7/6	1	
01 114		0.006		7/3	100	
01 116				2/3, 2/33	4	
01 119				7/3	50	
01 120				7/3	50	
01 121				7/3	50	
01 123	11.214			7/6	1	
01 126		0.012		7/3	100	
01 127		0.016		7/3	100	
01 128		0.024		7/3	100	
01 129		0.037		7/3	50	

Part no.	Amount of copper in kg	Amount of brass in kg	Amount of silver in g	Page	Pack size	
01 130		0.249		7/3	1	
01 131				2/1	5	
01 132		0.004		2/3, 2/33	4	
01 135	0.019	0.007		1/1	6	
01 136				2/5	1	
01 137				2/5, 2/33	1	
01 138				7/1	30	
01 139				7/1	10	
01 140	6.500			2/2	1	
01 141	0.476			2/10	3	
01 143		0.013		7/4	50	
01 144		0.013		7/4	50	
01 145	0.497	0.359		2/10	3	
01 146	0.854			7/6	1	
01 147		0.842		2/6, 2/33	1	
01 162		0.463		2/6, 2/33	1	
01 165	0.036	0.021		1/1	1	
01 166		0.181		1/2, 2/10	12	
01 170				7/1	100	
01 182		0.040		2/25, 2/28, 6/6	3	
01 184	4.272			7/5	1	
01 185	0.198			2/9, 3/1, 4/6	3	
01 186	0.717			2/9, 3/1, 4/6	3	
01 187	24.360			2/4, 4/6	1	
01 188	4.640			2/4, 3/2	1	
01 189	6.723			2/4, 3/2	1	
01 190	23.100			2/4	1	
01 193		0.376		1/2, 2/10	3	
01 194	0.769			7/5	1	
01 196	0.883			7/5	1	
01 198	0.030			5/3, 5/4, 5/9, 6/2	3	
01 199		0.386		2/6	1	
01 200		0.027		2/8	3	
01 201		0.047		2/8	3	
01 202		0.069		2/8	3	
01 203				1/1, 2/7, 3/1, 4/2	25	
01 204	9.610			2/2	1	
01 206				2/8, 4/1	10	
01 207				4/1, 4/5	6	
01 218				4/1, 4/5	3	
01 222				4/5	3	
01 223	15.660			2/4	1	
01 224	15.660			2/4	1	
01 225	1.988			2/4, 3/2	1	
01 226	2.881			2/4, 3/2	1	
01 227	36.540			2/4	1	
01 228	0.040			5/3, 5/4, 5/9, 6/2	3	
01 229	23.100			2/4	1	
01 230				4/6	4	
01 231		0.018		2/3	3	
01 232		0.018		2/3	2	
01 234				2/3	4	
01 236				2/5	1	
01 237				2/5	1	
01 238				2/5	1	

Part no.	Amount of copper in kg	Amount of brass in kg	Amount of silver in g	Page	Pack size	
01 240	0.030	0.015		2/6	1	
01 243	0.045	0.027		2/6	1	
01 244				2/5	10	
01 245				2/5, 4/1	10	
01 249	15.400			2/4	1	
01 250	10.440			2/4	1	
01 251				4/1	5	
01 252				2/5	5	
01 253	1.709			7/5	1	
01 254				4/1	10	
01 255	2.563			7/5	1	
01 256	4.272			7/5	1	
01 257		0.013		7/4	50	
01 258		0.013		7/4	50	
01 272				1/1, 1/3	10	
01 273	17.800			2/9, 3/2, 7/5	1	
01 274	0.991			2/10	3	
01 275	1.580			2/10	3	
01 284				1/1, 2/7	100	
01 285				1/1, 2/7	50	
01 287				1/1, 2/7	25	
01 289				1/1, 2/7	100	
01 290				1/1, 2/7	50	
01 292				1/1, 2/7, 4/2	25	
01 295	6.059			2/10	1	
01 300				2/6	3	
01 301				2/6	3	
01 303				7/5, 7/6	4	
01 314				1/1, 1/3	2	
01 317				1/1, 1/3	10	
01 318		0.128		2/7, 3/1, 3/3, 4/2	6	
01 319		0.115		2/7, 3/3, 4/2	6	
01 320				2/5	8	
01 322	0.463			7/5	1	
01 323	3.418			7/5	1	
01 324	5.607			7/5	1	
01 333				7/3	10	
01 343	7.120			7/5	1	
01 356				2/1	10	
01 357				2/1	10	
01 358				2/1	10	
01 359				2/1	10	
01 360				2/10	1	
01 361				2/10	1	
01 362				2/10	1	
01 363				2/1	1	
01 364	0.015	0.009		1/3	1	
01 367	0.015	0.009		1/3	1	
01 369				3/3	6	
01 370	0.450	0.270		1/3	1	
01 371				1/3	2	
01 373				2/3	4	
01 374				1/1	10	
01 376				1/3	10	
01 377	6.915			3/3	1	
01 378	9.726			3/3	1	
01 379				3/3	12	

Part no.	Amount of copper in kg	Amount of brass in kg	Amount of silver in g	Page	Pack size	
01 380				3/3	12	
01 381	0.428			1/1, 2/2	1	
01 382	0.320			1/1, 2/2	1	
01 383	0.713			2/2	1	
01 384	0.534			2/2	1	
01 387	1.070			2/2	1	
01 388	0.801			2/2	1	
01 389	0.856			1/1, 2/2	1	
01 390	0.640			1/1, 2/2	1	
01 391	1.426			2/2	1	
01 392	1.068			2/2	1	
01 393	2.140			2/2	1	
01 394	1.602			2/2	1	
01 395	3.486			2/4	1	
01 396	2.610			2/4	1	
01 397	5.143			2/4	1	
01 398	3.850			2/4	1	
01 399	8.136			2/4	1	
01 400	6.090			2/4	1	
01 401	0.030	0.015		1/1	1	
01 413				2/7	10	
01 417				2/5	2	
01 418	1.234			7/5	1	
01 424				2/19	10	
01 479		0.007		4/1	4	
01 484	0.019			2/1	10	
01 485				2/1, 2/33	10	
01 495				2/1	10	
01 498		0.025		2/19	10	
01 500				2/1	10	
01 508				2/1	10	
01 509	8.900			2/9, 3/2, 7/5	1	
01 510	11.214			2/9, 3/2, 7/5	1	
01 512	0.027			2/8, 4/2, 4/5	25	
01 513	0.397			2/9, 3/1, 4/6	3	
01 514	0.091			2/8, 3/2, 4/2, 4/5	20	
01 515				2/1	2	
01 518				2/1	2	
01 536				5/2	1	
01 537		0.632		2/6	1	
01 538		0.347		2/6	1	
01 539				2/7	1	
01 540				2/7	1	
01 541				7/10	50	
01 542				7/10	50	
01 543				7/10	50	
01 544				7/10	50	
01 545				7/10	50	
01 546				7/10	50	
01 547				7/10	50	
01 548				7/10	50	
01 549				7/10	50	
01 550				7/10	50	
01 554				2/5	1	
01 555				2/5, 2/33	2	
01 563	0.031			2/6	8	

Part no.	Amount of copper in kg	Amount of brass in kg	Amount of silver in g	Page	Pack size	
01 573				2/1	10	
01 583	2.207			7/5	1	
01 586		0.159		2/8	10	
01 587		0.176		2/8	10	
01 590				2/7	1	
01 596				2/7	1	
01 597				2/7, 2/33	1	
01 599				2/5, 2/33	1	
01 601				2/1	1	
01 602				2/1, 5/2	1	
01 608	15.400			2/4, 4/6	1	
01 609	10.440			2/4, 4/6	1	
01 610	33.732			3/3	1	
01 611	2.136			7/5	1	
01 612	2.848			7/5	1	
01 613	5.696			7/5	1	
01 614	3.560			7/5	1	
01 615	7.120			3/2, 7/5	1	
01 616				2/8, 4/1	6	
01 617				4/1, 4/5	3	
01 618	1.282			1/1, 1/3, 2/2	1	
01 619	1.602			2/2	1	
01 620	2.136			2/2	1	
01 621	2.670			2/2	1	
01 622	3.204			2/2	1	
01 623	2.563			1/1, 2/2	1	
01 624	4.272			2/2	1	
01 625	6.408			2/2, 4/1	1	
01 626	8.544			4/1	1	
01 627	10.680			4/1, 4/5	1	
01 628	12.816			4/1, 4/5	1	
01 647		0.025		2/19	10	
01 670				7/10	5	
01 671				7/10	5	
01 672				7/10	5	
01 673				7/10	5	
01 674				7/10	5	
01 675				7/10	5	
01 676				7/10	5	
01 677				7/10	5	
01 678				7/10	5	
01 679				7/10	5	
01 685				7/9	10	
01 686				7/9	10	
01 687				7/9	10	
01 688				7/9	10	
01 689				7/9	10	
01 690				7/9	10	
01 691				7/9	10	
01 692				7/9	10	
01 693				7/9	10	
01 694				7/9	10	
01 701				7/10	25	
01 702				7/10	25	
01 703				7/10	25	
01 704				7/10	25	
01 705				7/10	25	
01 706				7/10	25	
01 707				7/10	25	
01 708				7/10	25	
01 709				7/10	25	

Part no.	Amount of copper in kg	Amount of brass in kg	Amount of silver in g	Page	Pack size	
01 715				7/9	50	
01 716				7/9	50	
01 717				7/9	50	
01 718				7/9	50	
01 719				7/9	50	
01 720				7/9	50	
01 721				7/9	50	
01 722				7/9	50	
01 724				7/9	50	
01 725				7/9	50	
01 726				7/9	50	
01 727				7/9	50	
01 728				7/9	50	
01 729				7/9	50	
01 730				7/9	1	
01 741				7/10	25	
01 742		0.045		4/5	6	
01 747	0.027			2/8	25	
01 748	0.091			2/8	20	
01 749	0.251			2/8	6	
01 753		0.347		2/6	1	
01 754		0.632		2/6	1	
01 756				2/7	1	
01 757				2/7	1	
01 759		0.115		2/7, 3/3, 4/2	3	
01 760		0.210		2/7, 3/1, 3/3, 4/2	3	
01 765	17.088			4/5	1	
01 766	21.360			4/5	1	
01 767	25.630			4/5	1	
01 823	0.195			2/10	6	
01 827	0.243	0.192		2/10	6	
01 829	0.792	0.585		2/10	3	
01 831	4.190			2/4, 3/2	1	
01 838	2.910			2/4, 3/2	1	
01 876				2/3	10	
01 886	0.757			2/10	3	
01 888	0.128			7/1	3	
01 890	0.130	0.044		7/1	3	
01 905	0.427	0.700		2/10	3	
01 906	0.230			2/9, 3/1, 4/6	3	
01 907	0.262			2/9, 3/1, 4/6	3	
01 911	0.262			2/9, 3/1, 4/6	3	
01 926		0.018		7/3	100	
01 927		0.035		7/3	50	
01 928		0.053		7/3	60	
01 929		0.073		7/3	50	
01 930		0.154		7/3	50	
01 931		0.107		7/3	100	
01 932		0.276		7/3	1	
01 934	0.301			2/9, 3/1, 4/6	3	
01 935	0.358			2/9, 3/1, 4/6	3	
01 936	0.230			2/9, 3/1, 4/6	3	
01 980				2/19	10	

Part no.	Amount of copper in kg	Amount of brass in kg	Amount of silver in g	Page	Pack size	
01 981				2/19	10	
01 990	0.195			2/10	6	
01 996		0.112		2/8	10	
01 997		0.125		2/8	10	
01 998				7/10	1	
02 225		0.046		7/7	25	
02 226		0.073		7/7	25	
02 227		0.089		7/7	10	
02 228		0.093		7/7	10	
02 231		0.187		7/7	35	
02 232		0.213		7/7	35	
02 233		0.294		7/7	5	
02 234		0.229		7/7	35	
02 235		0.309		7/7	5	
02 237		0.376		7/7	5	
02 238		0.233		7/7	35	
02 242		0.078		7/8	15	
02 243		0.097		7/8	15	
02 244		0.156		7/8	10	
02 246		0.195		7/8	10	
02 505		0.313		7/8	25	
02 517		0.295		7/8	25	
02 521		0.078		7/8	15	
02 526		0.089		7/8	15	
02 527		0.178		7/8	10	
02 538		0.392		7/8	25	
02 544		0.389		7/8	25	
02 603		0.090		7/7	30	
02 604		0.121		7/7	30	
02 605		0.151		7/7	20	
02 606		0.121		7/7	30	
02 607		0.151		7/7	20	
02 615		0.162		7/7	20	
02 619				7/8	10	
02 621				7/8	3	
03 161		0.049		7/11	3	
03 162		0.121		7/11	3	
03 163		0.179		7/11	3	
03 164	0.240			7/11	3	
03 173	0.056			5/14, 7/4	10	
03 181	0.800			7/11	1	
03 182	0.800			7/11	1	
03 183	0.800			7/11	1	
03 184	0.800			7/11	1	
03 185	0.770			7/11	3	
03 193	0.025			5/14, 7/4	10	
03 195	0.066			5/14, 7/4	10	
03 196	0.142			5/14, 7/4	10	
03 197	0.108			5/14, 7/4	10	
03 198	0.236			5/14, 7/4	10	
03 199	0.209		0.630	2/21, 2/30	1	
03 213	0.270		0.818	5/14, 7/4	3	
03 214				7/20	1	
03 215				7/20	1	
03 216				7/20	1	
03 217				7/20	1	
03 218				7/20	1	
03 219				7/20	1	
03 220				7/20	1	
03 221				7/20	1	
03 222				7/20	1	

Part no.	Amount of copper in kg	Amount of brass in kg	Amount of silver in g	Page	Pack size	
03 223				7/20	1	
03 224				7/20	1	
03 225				7/20	1	
03 226				7/20	1	
03 227				7/20	1	
03 228				7/19	1	
03 229				7/19	1	
03 230				7/19	1	
03 231				7/19	1	
03 232				7/19	1	
03 233				7/19	1	
03 234				7/19	1	
03 235				7/19	1	
03 236				7/19	1	
03 237				7/19	1	
03 238				7/19	1	
03 239				7/19	1	
03 240				7/19	1	
03 241				7/19	1	
03 243				7/11	3	
03 287				1/2	4	
03 289	0.157		0.585	5/2, 5/13	3	
03 290	0.134		0.400	5/2, 5/13	3	
03 299	0.201		0.612	2/21, 2/30	1	
03 300	0.598	0.234	1.530	2/23, 2/30	1	
03 301	0.556		1.380	2/23, 2/30	1	
03 316	0.189	0.032	0.516	1/2	1	
03 350	0.033		0.202	5/13	10	
03 351	0.099		0.606	5/13	4	
03 354	0.033		0.188	5/13	10	
03 355	0.101		0.564	5/13	4	
03 359				5/13	10	
03 369	0.046		0.290	4/3	10	
03 370	0.045		0.297	4/3	10	
03 377				5/13	100	
03 384	0.189		0.657	4/3	3	
03 502				7/12	1	
03 518	1.069		1.548	2/30	1	
03 519		0.025		5/14	10	
03 520	0.226		1.231	2/30	4	
03 521				7/11	3	
03 522				7/11	3	
03 523				7/11	3	
03 524				7/11	3	
03 525				7/11	3	
03 526				7/11	3	
03 527				7/11	3	
03 528				7/11	3	
03 529				7/11	3	
03 530				7/11	3	
03 531				7/11	3	
03 532				7/11	3	
03 533				7/11	3	
03 534				7/11	3	
03 549				7/11	3	
03 550				7/11	3	
03 551				7/11	3	
03 552				7/11	3	
03 553				7/11	3	
03 554				7/11	3	
03 555				7/11	3	

Part no.	Amount of copper in kg	Amount of brass in kg	Amount of silver in g	Page	Pack size	
03 556				7/11	3	
03 557				7/11	3	
03 558				7/11	3	
03 559				7/11	3	
03 560				7/11	3	
03 561				7/11	3	
03 562				7/11	3	
03 563				7/11	3	
03 564				7/11	3	
03 565				7/11	3	
03 566				7/11	3	
03 567				7/11	3	
03 568				7/11	3	
03 569				7/11	3	
03 570				7/11	3	
03 571				7/11	3	
03 572				7/11	3	
03 573				7/11	3	
03 574				7/11	3	
03 575				7/11	3	
03 577				7/11	3	
03 579				7/11	3	
03 581				7/11	3	
03 582				7/11	3	
03 587	0.045		0.297	4/3	10	
03 599	0.382		1.233	4/3	3	
03 601	0.189		0.657	4/3	3	
03 620		0.025		5/14	10	
03 654	0.189		1.003	2/30	4	
03 656	0.190		1.030	2/30	4	
03 657		0.096		5/14, 7/4	10	
03 668		0.087		5/14, 7/4	10	
03 693	1.240		2.874	2/30	1	
03 727				2/31, 4/4, 4/7, 6/6	3	
03 749	0.099		0.585	5/13	4	
03 757	0.269		0.642	5/14, 7/4	3	
03 758	0.033		0.202	5/13	12	
03 759	0.099		0.606	5/13	4	
03 760	0.033		0.188	5/13	12	
03 761	0.101		0.564	5/13	4	
03 762	0.089		0.320	5/13	3	
03 763	0.267		0.960	5/13	1	
03 764	0.091		0.492	5/13	3	
03 765	0.275		1.476	5/13	1	
03 766	0.367		1.134	5/13	3	
03 767	1.102		3.402	5/13	1	
03 768	0.414		1.094	5/13	3	
03 769	1.243		3.282	5/13	1	
03 790	0.422		1.169	4/3	3	
03 791				4/3	10	
03 792				4/3	3	
03 793				4/3	3	
03 794				4/3	3	
03 795	0.382		1.233	4/3	3	
03 849				2/25, 2/28, 6/6	10	
03 908				7/12	3	
03 909				7/12	3	
03 910				7/12	3	
03 911				7/12	3	

Part no.	Amount of copper in kg	Amount of brass in kg	Amount of silver in g	Page	Pack size	
03 912				7/12	3	
03 913				7/12	3	
03 914				7/12	3	
03 915				7/12	3	
03 916				7/12	3	
03 917				7/12	3	
03 918				7/12	3	
03 919				7/12	3	
03 920				7/12	3	
03 922				7/12	3	
03 924				7/12	3	
03 925				7/12	3	
03 927				7/12	3	
03 928				7/12	3	
03 929				7/12	3	
03 930				7/12	3	
03 938				7/12	3	
03 941				7/12	3	
03 942				7/12	3	
03 943				7/12	3	
03 945				7/12	3	
03 946				7/12	3	
03 947				7/12	3	
03 949				7/12	3	
05 188		0.007		5/14, 7/4	50	
05 779				7/2	100	
05 780				7/2	20	
05 781				7/2	20	
05 782				7/2	20	
05 783				7/2	20	
05 784				7/2	20	
05 785				7/2	20	
05 786				7/2	20	
05 787				7/2	20	
05 788				7/2	20	
05 789				7/2	20	
05 790				7/2	20	
05 791				7/2	20	
05 792				7/2	20	
05 800				7/2	20	
05 801				7/2	20	
05 802				7/2	20	
08 824		0.002		7/3	100	
08 825				7/3	100	
30 322	3.195	2.101		2/10	1	
30 473	4.145	2.101		2/10	1	
30 894				2/31, 4/4, 4/7, 6/6	3	
30 930				4/10	10	
31 001				5/3	10	
31 004				5/4, 5/5	100	
31 005				7/9	20	
31 006				7/9	20	
31 008				7/13	10	
31 009				7/13	10	
31 010				7/13	10	
31 011				7/13	10	
31 012	0.506			5/3, 5/4, 5/9, 6/2	10	
31 014	0.171			5/3, 5/4, 5/9, 6/2	25	

Part no.	Amount of copper in kg	Amount of brass in kg	Amount of silver in g	Page	Pack size	
31 017				7/13	10	
31 018				7/13	10	
31 019				7/13	10	
31 024	0.221			5/4	25	
31 026	0.504			5/4	10	
31 027				5/3, 5/4, 5/5, 5/9, 6/2	50	
31 028				5/3, 5/4, 5/5, 5/9, 6/2	25	
31 029				5/3, 5/4, 5/5, 5/9, 6/2	25	
31 056	1.125			5/3, 5/4, 5/9, 6/2	4	
31 057	0.450			5/3, 5/4, 5/9, 6/2	10	
31 070				2/18	10	
31 071				2/18	10	
31 072				2/18	5	
31 073				2/18	5	
31 084				5/3, 5/4, 5/9, 6/2	10	
31 085				5/3, 5/4, 5/5, 5/9, 6/2	25	
31 086				5/4, 5/5	100	
31 098				7/10	20	
31 100				7/10	20	
31 101	0.196			5/1, 5/9	25	
31 102	0.535			5/9	10	
31 103				5/1, 5/9	50	
31 104				7/9	20	
31 105	0.007			5/7	12	
31 110	0.007			5/7	12	
31 111	0.014			5/7	6	
31 112	0.014			5/7	6	
31 113	0.021			5/7	4	
31 114	0.028			5/7	3	
31 115	0.011			5/7	6	
31 116	0.039			5/7	3	
31 117	0.024			5/7	3	
31 118	0.037			5/7	2	
31 119	0.065			5/7	1	
31 120	0.023	0.032		5/7	6	
31 121	0.078	0.064		5/7	3	
31 122	0.047	0.065		5/7	3	
31 123	0.071	0.098		5/7	2	
31 124	0.126	0.130		5/7	1	
31 130	0.007			5/8	12	
31 132	0.014			5/8	6	
31 133	0.021			5/8	4	
31 135	0.011			5/8	6	
31 138	0.037			5/8	2	
31 140	0.023	0.032		5/8	6	
31 143	0.071	0.098		5/8	2	
31 157	0.020			5/1, 5/9	50	
31 158	0.216		2.511	2/20	1	
31 168	0.065			5/7	1	
31 171	0.126	0.130		5/7	1	

Part no.	Amount of copper in kg	Amount of brass in kg	Amount of silver in g	Page	Pack size	
31 173		0.026		5/5	9	
31 174		0.081		5/5	3	
31 175		0.041		5/5	9	
31 176		0.126		5/5	3	
31 177				7/13	10	
31 178				7/13	10	
31 179				7/13	10	
31 180				7/13	10	
31 181				7/13	10	
31 182				7/13	10	
31 183				7/13	10	
31 184				7/13	10	
31 185				7/13	10	
31 186				7/13	10	
31 187				7/13	10	
31 188				7/13	10	
31 189				7/13	10	
31 190				7/13	10	
31 191				7/13	10	
31 192				7/13	10	
31 193				7/13	10	
31 194				7/13	10	
31 195				7/13	10	
31 196				7/13	10	
31 197				7/13	10	
31 198				7/13	10	
31 199				7/13	10	
31 200				7/13	10	
31 201				7/13	10	
31 202				7/13	10	
31 203				7/13	10	
31 204				7/13	10	
31 205				7/15	10	
31 206				7/15	10	
31 207				7/15	10	
31 208				7/15	10	
31 209				7/15	10	
31 210				7/15	10	
31 211				7/15	10	
31 212				7/15	10	
31 213				7/15	10	
31 214				7/15	10	
31 215				7/15	10	
31 216				7/15	10	
31 217				7/15	10	
31 218				7/15	10	
31 219				7/15	10	
31 220				7/15	10	
31 221				7/15	10	
31 222				7/15	10	
31 223				7/15	10	
31 224				7/15	10	
31 225				7/15	10	
31 226				7/15	10	
31 227				7/15	10	
31 228				7/15	10	
31 229				7/15	10	
31 232	0.216		2.511	2/20	1	
31 233	0.007			5/7	12	
31 235				7/18	10	
31 236				7/18	10	

Part no.	Amount of copper in kg	Amount of brass in kg	Silver content in g	Page	Pack size	
31 237				7/18	10	
31 238				7/18	10	
31 239				7/18	10	
31 240				7/18	10	
31 241				7/18	10	
31 242				7/18	10	
31 243				7/18	10	
31 244				7/17	10	
31 245				7/17	10	
31 246				7/17	10	
31 247				7/17	10	
31 248				7/17	10	
31 249				7/17	10	
31 250				7/17	10	
31 251				7/17	10	
31 252				7/17	10	
31 258	0.007			5/7	12	
31 267				5/9	1	
31 268				5/9	1	
31 269				5/9	1	
31 270				5/9	1	
31 271				5/9	1	
31 272				5/9	1	
31 273	0.009		1.020	5/7	12	
31 274	0.023		1.020	5/7	4	
31 275	0.007			5/8	12	
31 276	0.014			5/8	6	
31 277	0.021			5/8	4	
31 278	0.011			5/8	6	
31 279	0.024			5/8	3	
31 280	0.037			5/8	2	
31 281	0.023	0.032		5/8	6	
31 282	0.047	0.065		5/8	3	
31 283	0.071	0.098		5/8	2	
31 284	0.023	0.032		5/12	6	
31 285	0.047	0.065		5/12	3	
31 286		0.022		5/4	9	
31 287	0.071	0.098		5/12	2	
31 288		0.066		5/4	3	
31 291		0.031		5/4	9	
31 293		0.094		5/4	3	
31 295	0.007			5/11	12	
31 296	0.014			5/11	6	
31 297	0.021			5/11	4	
31 298	0.007			5/11	12	
31 299	0.014			5/11	6	
31 300	0.021			5/11	4	
31 301		0.021		5/3	9	
31 302		0.064		5/3	3	
31 303		0.019		5/3	9	
31 306		0.058		5/3	3	
31 307	0.030		0.800	6/1	3	
31 308	0.050		1.600	6/1	2	
31 309	0.194			5/5	25	
31 310	0.463			5/5	10	
31 311	0.189			5/5	25	
31 312	0.454			5/5	10	
31 313	0.060		1.600	6/1	2	
31 314	0.090		2.400	6/1	1	
31 315	0.110		3.200	6/1	1	
31 316				6/2	1	

Part no.	Amount of copper in kg	Amount of brass in kg	Silver content in g	Page	Pack size	
31 320				7/20	10	
31 321				7/20	10	
31 322				7/20	10	
31 323				7/20	10	
31 324				7/20	10	
31 325				7/20	10	
31 326				7/20	10	
31 327				7/20	10	
31 328				7/20	10	
31 329				7/20	10	
31 330				7/20	10	
31 331				7/20	10	
31 332				7/20	10	
31 333				7/19	10	
31 338				7/19	10	
31 342				7/19	10	
31 345				7/19	10	
31 347				7/19	10	
31 349				7/19	10	
31 351				7/19	10	
31 352				7/19	10	
31 353				7/19	10	
31 354				7/19	10	
31 355				7/19	10	
31 357				7/19	10	
31 358				7/19	10	
31 359				7/19	10	
31 360				7/19	10	
31 361				7/19	10	
31 362				7/19	10	
31 363				7/19	10	
31 364				7/19	10	
31 365				7/14	10	
31 366				7/14	10	
31 367				7/14	10	
31 368				7/14	10	
31 369				7/14	10	
31 370				7/14	10	
31 371				7/14	10	
31 372				7/14	10	
31 373				7/14	10	
31 374				7/14	10	
31 375				7/14	10	
31 376				7/14	10	
31 377				7/14	10	
31 378				7/14	10	
31 379				7/14	10	
31 380				7/14	10	
31 381				7/14	10	
31 382				7/14	10	
31 383				7/14	10	
31 384				7/14	10	
31 385				7/14	10	
31 386				7/14	10	
31 387				7/14	10	
31 388				7/14	10	
31 389				7/14	10	
31 390				1/4	1	
31 393				7/14	10	
31 394				7/17	10	
31 395				7/17	10	

Part no.	Amount of copper in kg	Amount of brass in kg	Silver content in g	Page	Pack size	
31 396				7/17	10	
31 397				7/17	10	
31 398				7/17	10	
31 399				7/17	10	
31 400				7/17	10	
31 401				7/18	10	
31 402				7/18	10	
31 403				7/18	10	
31 404				7/18	10	
31 405				7/18	10	
31 406				7/18	10	
31 407				7/18	10	
31 441	0.019	0.037		2/18	10	
31 442	0.019	0.060		2/18	10	
31 511				7/20	10	
31 512				7/20	10	
31 513				7/20	10	
31 514				7/20	10	
31 515				7/20	10	
31 524				5/9	1	
31 525	0.229		2.511	2/20	1	
31 544				5/1, 7/16	10	
31 545				5/1, 7/16	10	
31 546				5/1, 7/16	10	
31 547				5/1, 7/16	10	
31 548	0.450			5/1, 5/10, 5/11	10	
31 549	1.070			5/10, 5/11	10	
31 550	0.035			5/1, 5/10, 5/11	10	
31 552				5/10, 5/11	20	
31 554	0.030			2/1	6	
31 555	0.007			5/1	5	
31 556	0.030		0.800	6/1	3	
31 557	0.090		2.400	6/1	1	
31 558				5/1, 7/16	10	
31 559				5/1, 7/16	10	
31 560				5/1, 7/16	10	
31 561	0.680			5/10, 5/11	10	
31 901				2/20	5	
31 902				2/20, 6/2	20	
31 903				2/20	1	
31 904				7/9	36	
31 905				7/10	20	
31 906				7/10	10	
31 908				7/9	36	
31 909				7/9	36	
31 910				7/9	36	
31 911				7/10	20	
31 912				7/10	10	
31 913				7/9, 7/10	1	
31 918	0.028	0.037		2/18	10	
31 919	0.028	0.060		2/18	10	
31 920	0.039	0.032		5/12	6	
31 921	0.078	0.064		5/12	3	
31 922	0.117	0.096		5/12	2	
31 923	0.039	0.032		5/12	6	
31 924	0.078	0.064		5/12	3	
31 925	0.117	0.096		5/12	2	
31 929	0.007			5/11	12	
31 930	0.007			5/8	12	

Part no.	Amount of copper in kg	Amount of brass in kg	Silver content in g	Page	Pack size	
31 932	0.023	0.032		5/12	6	
31 933	0.047	0.065		5/12	3	
31 934	0.071	0.098		5/12	2	
31 935		0.025		2/19	8	
31 936		0.025		2/19	6	
31 939				5/9	1000	
31 940	0.011			5/8	6	
31 941	0.037			5/8	2	
31 942	0.023	0.032		5/8	6	
31 943	0.071	0.098		5/8	2	
31 946	0.028	0.037		2/18	8	
31 947	0.028	0.060		2/18	6	
31 950	0.019	0.037		2/18	8	
31 951	0.019	0.060		2/18	6	
31 954	0.031			2/20	4	
31 955	0.031			2/20	4	
31 956	0.021			2/20, 5/2	6	
31 957	0.047	0.065		5/8	3	
31 958	0.031			2/20, 2/32	4	
31 959	0.031			2/20, 2/32	4	
31 960	0.021			2/20, 5/2	6	
31 961	0.021			2/20	6	
31 962	0.021			2/20	6	
31 963	0.050			2/20, 2/33	4	
31 964	0.050			2/20, 2/33	4	
31 971	0.007			5/1	12	
31 972	0.024			5/8	3	
31 973	0.007			5/1	12	
32 001	0.172	0.008		4/2	1	
32 004	1.002	0.052		2/17	1	
32 137	0.307	0.018		2/15	1	
32 138	1.088	0.003		2/15	1	
32 140	0.317	0.018		2/15	1	
32 146	0.029			2/12, 2/33	4	
32 156	0.312	0.007		2/15	1	
32 157	1.091	0.007		2/15	1	
32 168	0.344	0.032		2/17	1	
32 214	0.156	0.027		2/17	1	
32 215	0.156	0.027		2/17	1	
32 216	0.344	0.032		2/17	1	
32 400	0.047			2/11	4	
32 401	0.047			2/11	4	
32 402	0.047			2/11	4	
32 404	0.091			2/11	4	
32 408	0.091			2/11	4	
32 412	0.109			2/11	4	
32 416	0.109			2/11	4	
32 420	0.004			2/11	4	
32 421	0.011			2/11	4	
32 425	0.004			2/11	4	
32 426	0.011			2/11	4	
32 427	0.048			2/14	4	
32 428	0.048			2/14	4	
32 429	0.036			2/13	4	
32 430	0.042			2/12	4	
32 431	0.042			2/12	4	
32 432	0.046			2/12	2	
32 433	0.042			2/12	4	
32 434	0.048			2/14	4	
32 436	0.021			2/12	4	
32 438	0.048			2/14	4	

Part no.	Amount of copper in kg	Amount of brass in kg	Silver content in g	Page	Pack size	
32 439	0.021			2/12	4	
32 440	0.040			2/13	2	
32 441	0.084			2/12	4	
32 442	0.084			2/12	4	
32 443	0.084			2/12	4	
32 444	0.084			2/12	4	
32 445	0.042			2/14	4	
32 446	0.084			2/12	4	
32 448	0.046			2/14	2	
32 449	0.084			2/12	4	
32 450	0.042			2/14	4	
32 451	0.048			2/14	4	
32 452	0.046			2/14	2	
32 453	0.052			2/14	2	
32 454	0.105			2/12	4	
32 455	0.105			2/12	4	
32 456	0.105			2/12	4	
32 457	0.105			2/12	4	
32 459	0.105			2/12	4	
32 460	0.105			2/14	4	
32 461	0.105			2/12	4	
32 463	0.105			2/14	4	
32 464	0.056			2/13	4	
32 465	0.102			2/13	4	
32 466	0.057			2/12	4	
32 467	0.057			2/12	4	
32 469	0.057			2/12	4	
32 472	0.057			2/12	4	
32 477	0.004			2/13	4	
32 478	0.011			2/13	4	
32 484	0.004			2/13	4	
32 485	0.011			2/13	4	
32 486	0.022			2/13	4	
32 487	0.022			2/13	4	
32 511				2/11, 2/13	10	
32 513				2/11, 2/13	10	
32 533	0.048			2/14	4	
32 534	0.084			2/14	4	
32 535	0.105			2/14	4	
32 549	0.254			2/15	1	
32 570	0.254	0.002		2/15	1	
32 575	0.254			2/15	1	
32 578	0.624			2/16, 2/33	1	
32 579	2.103	0.009		2/16, 2/33	1	
32 580	0.666			2/16, 2/33	1	
32 581	2.160			2/16, 2/33	1	
32 582	0.654			2/16, 2/33	1	
32 583	2.135	0.003		2/16, 2/33	1	
32 584	0.641			2/16, 2/33	1	
32 585	2.765	0.007		2/16, 2/33	1	
32 588	0.051			2/14	4	
32 590	0.046			1/2	4	
32 591	0.097			1/2	4	
32 592	0.460			2/15	1	
32 593	1.493	0.003		2/15	1	
32 594	0.097			2/21, 2/22	2	
32 595	0.232			2/23, 2/24	2	
32 601				2/15	1	
32 628	0.026			1/4	12	
32 629	0.023			1/4	12	
32 630	0.025			1/4	12	

Part no.	Amount of copper in kg	Amount of brass in kg	Silver content in g	Page	Pack size	
32 631				1/4	6	
32 632	0.008	0.004		1/4	12	
32 633				1/4	12	
32 634	0.008	0.004		1/4	12	
32 637	0.054			2/14	4	
32 638	0.063			2/14	4	
32 639	0.048			2/14	4	
32 640	0.209	0.004		1/3	1	
32 641	1.473			2/15	1	
32 651				2/15	1	
32 910		0.008		2/17	1	
32 911				2/17	1	
32 912				1/2	10	
32 937				2/17	4	
32 938				2/17	4	
32 947				2/11, 2/13	10	
32 948				2/11, 2/13	10	
32 949				2/11, 2/13	10	
32 950				2/11, 2/13	10	
32 951				2/11, 2/13	10	
32 954				2/11, 2/13	50	
32 956				2/11	10	
32 963				2/13	10	
32 964				2/11	10	
32 969				2/11, 2/13	50	
32 973				2/12	4	
32 974				2/12	4	
32 975	1.167	0.025		2/15	1	
32 976	0.353	0.011		2/15	1	
32 977	0.353	0.011		2/15	1	
32 978	1.473			2/15	1	
32 980	1.164	0.053		2/15	1	
32 981	0.212			2/15	1	
33 036				4/4	2	
33 051				2/28, 6/6	10	
33 087	2.240		4.992	4/8	1	
33 088	2.240		4.992	4/8	1	
33 089	3.030		4.992	4/8	1	
33 093	2.240	0.061	4.992	4/8	1	
33 094	2.240	0.061	4.992	4/8	1	
33 095	3.030	0.061	4.992	4/8	1	
33 097	2.240	0.060	4.992	4/8	1	
33 098	2.240	0.060	4.992	4/8	1	
33 099	3.030	0.060	4.992	4/8	1	
33 101				4/9	3	
33 113				4/4, 4/7, 4/9	4	
33 126				4/10	3	
33 127				4/10	3	
33 128				4/10	3	
33 142				2/26, 2/29, 6/3, 6/4, 6/7	2	
33 143				2/29, 6/7	2	
33 144				2/29, 6/7	2	
33 145		0.124		2/26, 2/28, 6/3, 6/4, 6/6	1	
33 146		0.200		2/28, 6/6	1	
33 147		0.288		2/28, 6/6	1	
33 148				2/27	1	
33 149	0.327	0.065	1.368	6/5	1	
33 150	0.686	0.065	2.064	6/5	1	
33 151	1.113	0.065	3.474	6/5	1	

Part no.	Amount of copper in kg	Amount of brass in kg	Silver content in g	Page	Pack size	
33 152				6/7	1	
33 153				6/7	1	
33 154				6/7	1	
33 155				2/26, 2/28, 6/7	10	
33 156				1/2, 2/25, 2/28, 2/31, 4/4, 4/7, 4/9, 6/6	1	
33 157				2/26, 2/28, 6/6	10	
33 158				6/7	1	
33 159				6/7	100	
33 160	0.905	0.065	1.368	2/23, 2/27	1	
33 161	1.622	0.065	4.342	2/27	1	
33 162	2.761	0.065	6.723	2/27	1	
33 163		0.027		2/26, 2/28, 6/3, 6/4, 6/6, 6/11	1	
33 164		0.047		2/28, 4/9, 6/6, 6/11	1	
33 165		0.069		2/28, 6/6, 6/11	1	
33 166		0.080		2/26, 2/28, 6/3, 6/4, 6/6	1	
33 167		0.137		2/28, 4/9, 5/2, 6/6	1	
33 168		0.177		2/28, 6/6	1	
33 173				4/10	3	
33 174				4/10	3	
33 179				4/10	3	
33 180				4/10	3	
33 193				6/7	1	
33 198	0.209		0.630	2/21, 2/27	1	
33 199	0.110		0.624	6/5	1	
33 200	0.110		0.624	6/5	1	
33 201	0.307	0.062	1.368	6/5	1	
33 202	0.665	0.062	2.064	6/5	1	
33 203	1.090	0.062	3.474	6/5	1	
33 204	7.090			6/5	1	
33 206	0.393	0.003	0.624	2/21, 2/27	1	
33 207	0.118	0.003	0.624	6/5	1	
33 208	0.118	0.003	0.624	6/5	1	
33 216	0.358	0.065	0.432	2/27	1	
33 217	0.086	0.065	0.432	6/5	1	
33 219				6/7	10	
33 220				6/7	10	
33 221	0.110		0.624	6/5	1	
33 222	0.110		0.624	6/5	1	
33 223				6/7	2	
33 224	0.014			2/25, 2/28, 2/31, 4/4, 4/7, 6/6	3	
33 225				6/7	10	
33 226				6/7	10	
33 227				6/7	10	
33 234	0.488		2.241	2/31	1	
33 235	0.350		1.819	4/4, 4/7	1	
33 236	0.357			4/7	1	
33 237	0.726			4/7	1	

Part no.	Amount of copper in kg	Amount of brass in kg	Silver content in g	Page	Pack size	
33 238				4/4	3	
33 243	2.423	0.060	4.992	4/8	1	
33 244	2.423	0.060	4.992	4/8	1	
33 245	3.292	0.060	4.992	4/8	1	
33 246				6/10	1	
33 247				6/7	1	
33 257				4/7, 4/9	2	
33 267				4/9	3	
33 268				4/9	3	
33 269				4/9	3	
33 270				4/9	3	
33 271	0.087			4/9	1	
33 272	0.087			4/9	1	
33 273	0.061			4/9	3	
33 274	0.087			4/9	3	
33 280				4/7	2	
33 281				4/10	1	
33 282	0.348			4/7	1	
33 283				6/10	1	
33 285	0.488		2.241	2/31	1	
33 286	0.350		1.819	4/4, 4/7	1	
33 287	2.288	0.060	4.992	4/8	1	
33 288	2.288	0.060	4.992	4/8	1	
33 289	3.078	0.060	4.992	4/8	1	
33 292				4/10	3	
33 294				4/10	3	
33 296				4/10	3	
33 298				4/10	3	
33 300				4/7, 4/10	3	
33 301				4/9	3	
33 308	1.479	2.097	5.100	5/12	1	
33 311	3.127	1.048	8.349	2/32	1	
33 315				2/29	1	
33 316				2/29	1	
33 317				2/29	2	
33 321	7.922	0.122	9.984	4/8	1	
33 322				4/10	1	
33 323				4/10	1	
33 324	0.209	0.003	0.630	2/21, 2/27	1	
33 325	0.897	0.062	1.368	2/23, 2/27	1	
33 326	1.614	0.062	4.342	2/27	1	
33 327	2.751	0.062	6.723	2/27	1	
33 328	0.110	0.003	0.624	6/5	1	
33 329	0.110	0.003	0.624	6/5	1	
33 330	0.319	0.062	1.368	6/5	1	
33 331	0.678	0.062	2.064	6/5	1	
33 332	1.103	0.062	3.474	6/5	1	
33 333	0.248			6/8	1	
33 334	0.980			6/8	1	
33 335	1.041			6/8	1	
33 336	2.043			6/8	1	
33 337	0.413			6/9	1	
33 338	1.803			6/9	1	
33 339	2.135			6/9	1	
33 340	3.897			6/9	1	
33 341				4/6	2	
33 342				6/10	1	
33 343				6/10	1	
33 345				6/10	1	
33 346				6/10	1	
33 347				6/8, 6/9	1	

Part no.	Amount of copper in kg	Amount of brass in kg	Silver content in g	Page	Pack size	
33 348				6/10	1	
33 349				6/10	1	
33 350				6/8, 6/9	2	
33 351				6/8, 6/9	2	
33 352				6/8, 6/9	2	
33 355	0.248			6/7	1	
33 356	0.980			6/7	1	
33 357	1.041			6/7	1	
33 358	2.043			6/7	1	
33 359	0.413			6/9	1	
33 360	1.803			6/9	1	
33 361	2.135			6/9	1	
33 362	3.897			6/9	1	
33 363				6/11	3	
33 364				6/11	3	
33 365				6/11	3	
33 366		0.080		6/11	3	
33 367		0.129		6/11	3	
33 368		0.177		6/11	3	
33 369		0.161		6/11	3	
33 370		0.259		6/11	3	
33 371		0.355		6/11	3	
33 372		0.200		4/9	3	
33 373				4/10	12	
33 375				4/10	1	
33 376	0.234			6/6	4	
33 377	0.396			6/6	4	
33 378	0.041	0.046		6/6	3	
33 380				6/10	1	
33 381				6/10	1	
33 384	0.350		1.819	4/3	1	
33 385		0.288		2/28, 6/6	1	
33 392	0.553			6/6	4	
33 393	0.372	0.468	1.560	6/5	1	
33 394	0.201		0.612	2/21, 2/27	1	
33 398	0.201		0.612	2/21, 2/27	1	
33 402	0.351		0.990	2/21, 2/32	1	
33 403	0.540	0.222	1.850	2/23, 2/32	1	
33 408	0.252		1.010	5/12	1	
33 409	0.504	0.444	1.740	5/12	1	
33 416	0.189	0.030	0.516	1/2, 1/3	1	
33 418				2/29, 6/7	2	
33 419				2/29, 6/7	2	
33 420	0.233		0.612	2/21, 2/27	1	
33 421	0.450		0.990	2/21, 2/32	1	
33 422	0.479		0.990	2/21, 2/32	1	
33 500	0.384	0.106	2.352	2/22	1	
33 501	0.408	0.106	3.582	2/22	1	
33 502	0.327	0.106	3.618	6/4	1	
33 503	0.384	0.128	2.352	2/22	1	
33 504	0.408	0.128	3.582	2/22	1	
33 505	0.327	0.128	3.618	6/4	1	
33 506	0.384	0.111	2.352	2/22	1	
33 510	0.810	0.303	7.872	2/24	1	
33 511	0.990	0.303	10.071	2/24	1	
33 512	0.815	0.303	11.235	6/4	1	
33 513	0.810	0.429	7.872	2/24	1	
33 514	0.990	0.429	10.071	2/24	1	
33 515	0.847	0.429	11.235	6/4	1	
33 516	0.823	0.303	7.872	2/24	1	
33 540	0.443	0.106	3.798	2/22	1	

Part no.	Amount of copper in kg	Amount of brass in kg	Silver content in g	Page	Pack size	
33 541	0.467	0.106	5.028	2/22	1	
33 542	0.386	0.106	5.064	6/3	1	
33 543	0.443	0.128	3.798	2/22	1	
33 544	0.467	0.128	5.028	2/22	1	
33 545	0.386	0.128	5.064	6/3	1	
33 550				2/24	1	
33 551				2/24	1	
33 552				6/3	1	
33 553				2/24	1	
33 554				2/24	1	
33 555				6/3	1	
33 600	0.598	0.234	1.530	2/23, 2/27	1	
33 601	0.885	0.062	1.368	2/23, 2/27	1	
33 602	1.601	0.062	4.342	2/27	1	
33 603	2.738	0.062	6.723	2/27	1	
33 905				1/2	10	
33 906	0.162			6/6	4	
33 907		0.020		6/6	3	
33 908				2/25, 2/26, 6/3, 6/4	1	
33 909				2/26, 2/28, 6/3, 6/4, 6/6	3	
33 910				2/25, 2/26, 6/3, 6/4	1	
33 911				2/25, 2/26, 6/3, 6/4	1	
33 912				2/25, 2/26, 6/3, 6/4	1	
33 913				2/25, 2/26, 6/3, 6/4	1	
33 914	0.036	0.048		2/25, 6/3, 6/4	3	
33 915				2/25, 6/3, 6/4	3	
33 916				2/26, 2/30	3	
33 917			0.052	2/26, 2/28, 6/6	1	
33 918				2/26, 2/28, 6/7	3	
35 001				3/2	1	
35 004	12.570			3/1	1	
35 005	8.730			3/1	1	
35 006	8.644			3/1	1	
35 007	5.966			3/1	1	
35 008				3/2	2	
35 009				3/2	1	
35 015	13.921			3/1	1	
35 016	20.170			3/1	1	
35 017				3/2	4	
35 034	28.434			3/1	1	
78 105				6/7	10	
78 139				6/7	10	
78 442				7/4	200	
78 443				7/4	200	
78 447				7/4	200	
78 463				2/5	10	
78 491				7/7, 7/8	10	
78 801				2/18, 5/4, 5/5	1	
78 893				6/7	10	

Part no.	Amount of copper in kg	Amount of brass in kg	Silver content in g	Page	Pack size	
79 448				2/25, 2/30, 4/3, 5/13	30	
79 449				2/30, 4/3, 5/2, 5/13	30	
79 663				2/18, 2/19	10	
79 738				7/1	10	
79 811				2/25, 2/29, 6/7	1	
79 859				7/1	10	

Wöhner-Group worldwide

Wöhner GmbH & Co. KG
Elektrotechnische Systeme
Mönchrödener Straße 10
96472 Rödental
GERMANY
Phone +49 (0) 9563/751-0
Fax +49 (0) 9563/751-131
E-Mail info@woehner.de
www.woehner.com

Wöhner-Group worldwide

Worldwide branches

China
Wöhner (Beijing)
Electric Systems Co., Ltd.
Yongchang Industry Park No. 702
Beijing Development Area
100176 Beijing
P.R. CHINA
Phone +86 (0) 10/67 87 03 00
Fax +86 (0) 10/67 87 03 20
E-Mail info@woehner.com.cn
www.woehner.com.cn

India
Wöhner Kay Ltd.
Factory Area
P.O. Box 8
Kapurthala-144 601
INDIA
Phone +91 (0) 18222/325 87
Fax +91 (0) 18222/363 28
E-Mail smgbhatia@rediffmail.com

Southeast Asia
Southeast Asia Regional Office
No. 107, Jalan Puteri 5/3
Bandar Puteri Puchong
47100 Puchong Selangor
MALAYSIA
Phone +603 (0) 62/75 22 71
Fax +603 (0) 62/75 22 91
E-Mail alan.soon@woehner.com
www.woehner.com

UAE
Regional Office Middle East
P.O. Box 17 372
LOB 20/F 10
Jebel Ali Free Zone
Dubai
U.A.E.
Phone +971 (0) 4/881 05 91/92
Fax +971 (0) 4/881 05 93
E-Mail dubai@woehner.com
www.woehner.com

USA/Canada
Wöhner USA
1 Lafayette Road
Hampton, NH 03842
USA
Phone +1 (0) 603/926 10 95
Fax +1 (0) 603/926 08 70
E-Mail info@woehner.com

Wöhner-Group worldwide

Worldwide representatives

Argentinia
Nöllmann S.A.
Ituzaingo 795 / 811
1646 San Fernando
Buenos Aires
ARGENTINA
Phone +54 (0) 11/47 44 07 62
Fax +54 (0) 11/47 46 17 48
E-Mail ventas@nollmann.com.ar
www.nollmann.com.ar

Australia
NHP Electrical Engineering Products
43–67 River Street
Richmond, Victoria 3121
AUSTRALIA
Phone +61 (0) 3/94 29 29 99
Fax +61 (0) 3/94 29 20 35
E-Mail mel-sales@nhp.com.au
www.nhp.com.au

Brazil
Holec Industrias Electricas Ltda.
Rua Antonio Galvao Pacheco, 185
18550-000 Boituva S.P.
BRAZIL
Phone +55 (0) 153/263 10 17
Fax +55 (0) 153/263 26 86
E-Mail fabrica@holec.com.br

Chile
Asesorias, Servicios e
Inversiones NDU Ltda.
La Cisterna-Santiago
CHILE
Phone +56 (0) 2/526 66 46
Fax +56 (0) 2/526 50 46
E-Mail info@ndu.cl
www.ndu.cl

Columbia
EIMPSA S.A.
Calle 15 N
13-50 Bogotá
COLUMBIA
Phone +57 (0) 1/327 52 22
Fax +57 (0) 1/334 06 86
E-Mail ventas@eimpsa.com.co
www.eimpsa.com

Indonesia
PT Industrindo Niagatama
JL. Agung Jaya XIV No. 14
Sunter Agung, Tanjung Priok
Jakarta Utara – 14350
INDONESIA
Phone +62 (0) 21/65 30 26 57
Fax +62 (0) 21/65 30 26 59
E-Mail yos.hermanto@indotama.biz
suky@indotama.biz

Kazakhstan
ETC CONTACT L.L.C.
Suynbaya str. 50, 3-rd floor
050000 Almaty
KAZAKHSTAN
Phone/Fax +7 (0) 727/382 15 05
Mobil +7 (0) 727/382 17 55
E-Mail a.nossov@etc-contact.kz

Malaysia
Pentapower (M) Sdn Bhd
No. 107, Jalan Puteri 5/3
Bandar Puteri Puchong
47100 Puchong
Selangor Darul Ehsan
MALAYSIA
Phone +603 (0) 80 62 66 35
Fax +603 (0) 80 62 46 35
E-Mail kysan88@gmail.com
sales.pentapower@gmail.com

Wöhner-Group worldwide

Mexico
Grupo MCB
Prol. Rio San Angel 450 Fracc.
Atlamaya, D.F. 01760
MEXICO
Phone +52 (0) 55/56 68 27 55
Fax +52 (0) 55/56 68 49 20
E-Mail info@grupomcb.com

New Zealand
Bremca Industries Limited
10 Kennedy Place
Opawa
Christchurch
NEW ZEALAND
Phone +64 (0) 3/332 63 70
Fax +64 (0) 3/332 63 77
E-Mail sales@bremca.co.nz
www.bremca.co.nz

Singapore
EC E+T Pte Ltd.
No. 16 D Lorong Ampas
GS Building
Singapore 328778
SINGAPORE
Phone +65 (0) 63 53 54 73
Fax +65 (0) 63 53 54 73
E-Mail sales@ecet.com.sg
technical@ecet.com.sg

South Africa
Electromechanica
9/11 Data Crescent
Ormonde Ext 8
Johannesburg
SOUTH AFRICA
Phone +27 (0) 11/249 50 00
Fax +27 (0) 11/496 27 79
E-Mail info@em.co.za
www.em.co.za

Thailand
ITM Capacitor Co., Ltd.
91/105 Moo 4, Bangna Trad Road
Bangchalong, Bangplee
Samutprakarn 10540
THAILAND
Phone +662 (0) 336/11 16
Fax +662 (0) 336/11 14
E-Mail tm@itm.co.th
www.itm.co.th

Uzbekistan
OOO Elektro Potential
Bodomzor Yoli str. 2 B
100084 Tashkent
UZBEKISTAN
Phone/Fax +7 (0) 727/382 15 05
Mobil +7 (0) 727/382 17 55
E-Mail mz1958@ya.ru

Vietnam
Ohmsys International Private Limited
33 Ubi Ave 3, #05-62
Vertex
Singapore 408868
SINGAPORE
Phone +65 (0) 65 09 34 35
Fax +65 (0) 65 09 88 53
E-Mail kheesong@ohmsys.com.sg

Wöhner-Group Europe

Wöhner GmbH & Co. KG
Elektrotechnische Systeme
Mönchrödener Straße 10
96472 Rödental
GERMANY
Phone +49 (0) 9563/751-0
Fax +49 (0) 9563/751-131
E-Mail info@woehner.de
www.woehner.com

Wöhner-Group Europe

Europe-wide branches

Austria
Wöhner Ges.m.b.H.
Schottenfeldgasse 59
1070 Wien
AUSTRIA
Phone +43 (0) 1/524 06 83
Fax +43 (0) 1/524 06 83 11
E-Mail info@woehner.at
www.woehner.at

France
Wöhner France S.A.S
6, Avenue Victor Hugo
93270 Sevran
FRANCE
Phone +33 (0) 3/23 64 70 04
Fax +33 (0) 3/23 64 72 59
E-Mail info@woehner.fr
www.woehner.fr

Great Britain
Woehner (UK) Limited
P.O. Box 1117
Doncaster
South Yorkshire DN9 2WL
GREAT BRITAIN
Phone +44 (0) 1427/89 06 66
Fax +44 (0) 1427/89 18 40
E-Mail info@woehner.co.uk
www.woehner.com

Italy
Wöhner Italia S.R.L.
Viale Tunisia, 29
20124 Milano
ITALY
Phone +39 02/636 70-11
Fax +39 02/636 70-129
E-Mail info@wohner.it
www.wohner.it

Netherlands
Wöhner Benelux
Industrieweg 12 D
7944 HS Meppel
NETHERLANDS
Phone +31 (0) 522 24 51 54
Fax +31 (0) 522 24 53 70
E-Mail info_nl@woehner.com
www.woehner.com

Russia
Wöhner Russia
2-nd Kozhukhovskiy proezd, 23,
office 405
115432 Moscow
RUSSIA
Phone +7 (0) 495/671 95 94
Fax +7 (0) 495/671 95 94
E-Mail office-russia@woehner.com
www.woehner.com

Spain
Wöhner Electrotécnica S.L.
C/Mollet, 22
08120 La Llagosta
Barcelona
SPAIN
Phone +34 (0) 93/544 30 05
Fax +34 (0) 93/574 58 67
E-Mail info@woehner.es
www.wohner.es

Wöhner-Group Europe

Europe-wide representatives

Belgium
Electro-Flandria
Begoniastraat 6
9810 Nazareth-Eke
BELGIUM
Phone +32 (0) 9/385 51 11
Fax +32 (0) 9/385 64 30
E-Mail ef@online.be
www.electroflandria.be

Bulgaria
VALtronic
16, Bratja Miladinovi Str.
1000 Sofia
BULGARIA
Phone +359 (0) 2/988 10 57
Fax +359 (0) 2/986 79 12
E-Mail office@valtronic-bg.com
www.valtronic-bg.com

Croatia
Schrack Technik d.o.o.
Zavrtnica 17
10000 Zagreb
CROATIA
Phone +385 (0) 1/605 55 00
Fax +385 (0) 1/605 55 66
E-Mail schrack@schrack.hr
www.schrack.hr

Cyprus
N.N. Control Panels Ltd.
Ayias Silas Industrial Area
8 Alpeon St.
4180 Ypsonas, Limassol
CYPRUS
Phone +357 (0) 25 71/48 16
Fax +357 (0) 25 71/44 15
E-Mail info@nncontrolpanels.com
www.nncontrolpanels.com

Czech Republic
GHV Trading, spol. S.R.O.
Kounicova 67 a
60200 Brno
CZECH REPUBLIC
Phone +420 (0) 5/41 23 55 32
Fax +420 (0) 5/41 23 53 87
E-Mail ghv@ghvtrading.cz
www.ghvtrading.cz

Denmark
Duelco A/S
Systemvej 8
9200 Aalborg SV
DENMARK
Phone +45 (0) 70 10 10 07
Fax +45 (0) 70 10 10 08
E-Mail info@duelco.dk
www.duelco.dk

Finland
Oy Klinkmann AB
Fonseenintie 3
P.O. Box 38
00371 Helsinki
FINLAND
Phone +358 (0) 9/540 49 40
Fax +358 (0) 9/541 35 41
E-Mail automation@klinkmann.fi
www.klinkmann.com

Greece
2 kappa Ltd.
Sofokli Venizelou 13
54628 Menemeni Thessaloniki
GREECE
Phone +30 (0) 2310/77 55 10
Fax +30 (0) 2310/77 55 14
E-Mail info@2kappa.gr
www.2kappa.gr

Hungary
Schrack Technik d.o.o.
Vidor UTCA 5
1172 Budapest
HUNGARY
Phone +36 (0) 1/253 14 01
Fax +36 (0) 1/253 14 91
E-Mail schrack@schrack.hu
www.schrack.hu

Iceland
Rafmidlun ehf.
Ogurhvarf 8
IS-203 Kópavogur
ICELAND
Phone +354 (0) 5/40 35 00
Fax +354 (0) 5/40 35 01
E-Mail rafmidlun@rafmidlun.is
www.rafmidlun.is

Ireland
Demesne Electrical Sales
The Square Industrial Complex
Tallaght
Dublin 24
IRELAND
Phone +353 (0) 1/404 77 00
Fax +353 (0) 1/404 77 77
E-Mail info@demesne.ie
www.demesne.ie

Lithuania
Rifas UAB
Tinklu st. 29a
35115 Panevezys
LITHUANIA
Phone +370 (0) 45/58 27 28
Fax +370 (0) 45/58 27 29
E-Mail info@rifas.lt
www.rifas.lt

Norway
Kontram AS
Tormod Gjestlandsv. 41
3908 Porsgrunn
NORWAY
Phone +47 (0) 35/93 03 00
Fax +47 (0) 35/93 03 01
E-Mail info@kontram.no
www.kontram.no

Wöhner-Group Europe

Authorised distributors

Poland
Schrack Technik Polska Sp. z o.o.
ul. Staniewicka 5
03-310 Warszawa
POLAND
Phone +48 (0) 22/205 31 00
Fax +48 (0) 22/205 31 11
E-Mail se@schrack.pl
www.schrack.pl

Republic of Moldau
ElectroTehnoImport S.R.L.
Hincesti str. 61, office 314
2028 Chisinau
MOLDOVA
Phone/Fax +373 (0) 22/72 15 47
Mobil +373 (0) 22/72 15 47
E-Mail office@electroimport.md
www.electroimport.md

Serbia and Montenegro
Schrack Technik d.o.o.
Kumodraska 260
11000 Beograd
SERBIA AND MONTENEGRO
Phone +381 (0) 1/130 92-600
Fax +381 (0) 1/130 92-620
E-Mail office@schrack.co.yu
www.schrack.co.yu

Slowenia
Schrack Technik d.o.o.
Glavni trg 47
2380 Slovenj Gradec
SLOWENIA
Phone +386 (0) 2/883 92 00
Fax +386 (0) 2/884 34 71
E-Mail schrack.sg@schrack.si
www.schrack.si

Sweden
Beving Elektronik AB
Box 93
Storsätragräd 20–22
12722 Skärholmen
SWEDEN
Phone +46 (0) 8/680 11 99
Fax +46 (0) 8/680 11 88
E-Mail information@bevingelektronik.se
www.bevingelektronik.se

Switzerland
Trielec AG
Mühlentalstraße 136
8201 Schaffhausen
SWITZERLAND
Phone +41 (0) 52/632 10 20
Fax +41 (0) 52/625 88 25
E-Mail info@trielec.ch
www.trielec.ch

Turkey
Endaks Endüstriyel Aksesuarlar LTD. Sti.
Perpa Elektrikciler Carsisi
A Blok K.5 No. 292
Sisli-Istanbul
TURKEY
Phone +90 (0) 212/222 22 75
Fax +90 (0) 212/220 10 47
E-Mail info@endaks.com
www.endaks.com

Ukraine
Vector VS Ltd.
11-A, Boryspilska Str.
02093 Kiev
UKRAINE
Phone +380 (0) 44/461 89 47
Fax +380 (0) 44/461 89 20
E-Mail info@vector-vs.kiev.ua
www.vector-vs.kiev.ua

Denmark
Carlo Gavazzi Handel A/S
Over Hadstenvej 42
8370 Hadsten
DENMARK
Phone +45 (0) 89 60 61 00
Fax +45 (0) 86 98 15 30
E-Mail handel@gavazzi.dk
www.carlogavazzi.com

Representatives in Germany

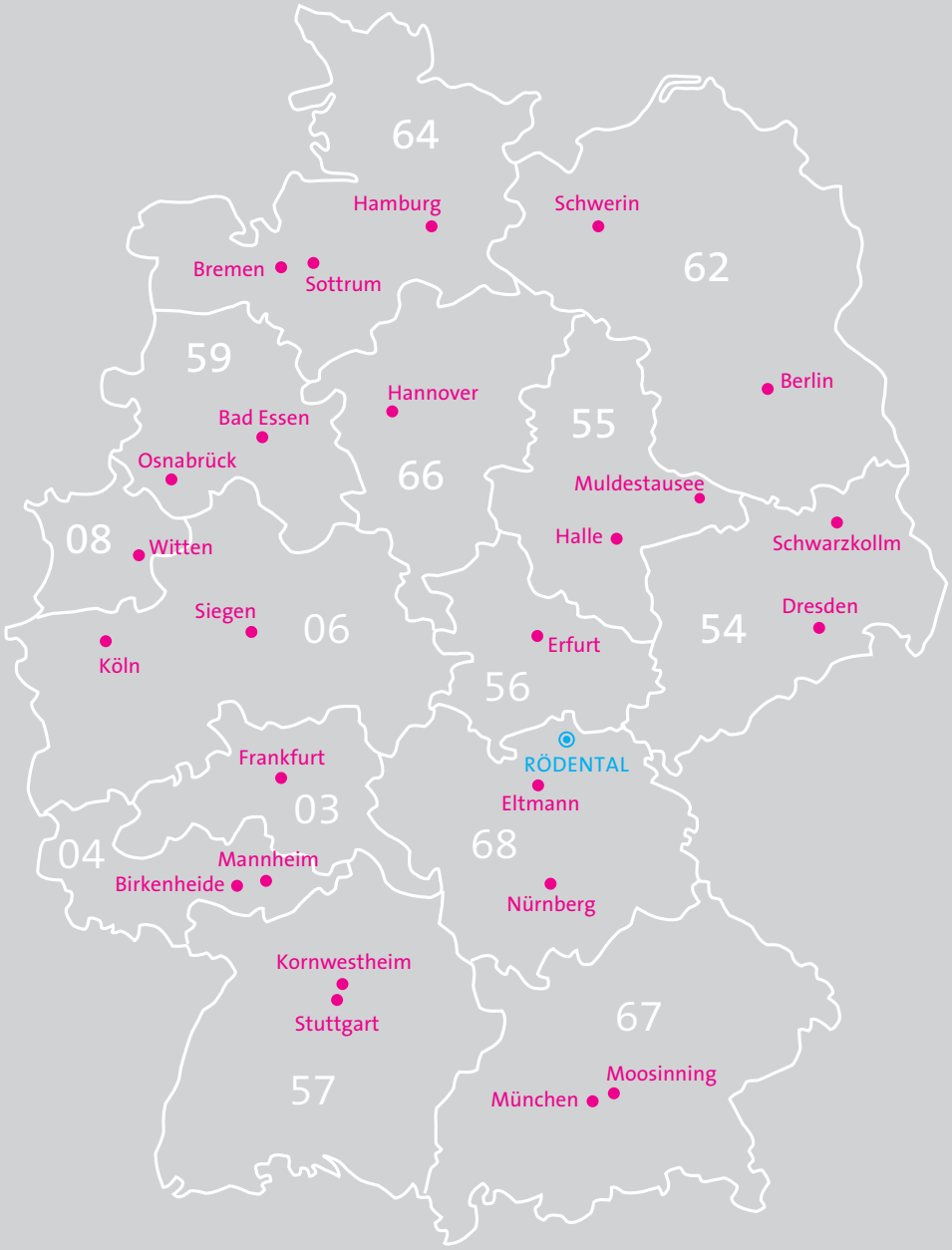

Representatives in Germany

03
Ingenieurbüro Stapf GmbH
Fellnerstraße 11
60322 Frankfurt/Main
Phone +49 (0) 69/15 30 04-0
Fax +49 (0) 69/596 22 87
E-Mail stapf@stapf.de
www.stapf.de

04
Lehner Elektrotechnik
Vertriebs GmbH
Brandenburgerstraße 3
67134 Birkenheide
Phone +49 (0) 6237/40 47 92
Fax +49 (0) 6237/59 78 53
E-Mail
lehner-elektrotechnik@t-online.de
www.lehner-elektro.de

06
Siegfried Klein
Elektro-Industrievertretungen e.K.
Inh. Harald Klein
In der Steinwiese 46
57074 Siegen
Phone +49 (0) 271/67 78
Fax +49 (0) 271/67 70
E-Mail info@sk-elektrotechnik.de
www.sk-elektrotechnik.de

08
J. Ibisch A. Kwiatkowski GbR
Schützenstraße 45
58452 Witten
Phone +49 (0) 2302/973 12-0
Fax +49 (0) 2302/973 12-22
E-Mail info@ibisch-kwiatkowski.de
www.ibisch-kwiatkowski.de

54
Ingenieurbüro Wuschko
Schwarzkollm
Dorfstraße 50
02977 Hoyerswerda
Phone +49 (0) 35722/319 97
Fax +49 (0) 35722/319 98
E-Mail info@wuschko.de
www.wuschko.de

55
Gerd Heinrich GmbH
Elektrovertrieb und Stromservice
Am Dorfteich 8
06774 Muldestausee; OT Gossa
Phone +49 (0) 34955/205 16
Fax +49 (0) 34955/214 00
E-Mail g.r.heinrich@web.de

56
Helmut Westphal
Ingenieurbüro für Elektrotechnik
Michael-Altenburg-Weg 17
99100 Erfurt-Alach
Phone +49 (0) 36208/780 84
Fax +49 (0) 36208/780 85
E-Mail helmut.westphal@email.de

57
Schiele-Vollmar GmbH
Gesellschaft für
Automatisierungsprodukte
Friedenstraße 20
70806 Kornwestheim
Phone +49 (0) 7154/82 05-0
Fax +49 (0) 7154/82 05-99
E-Mail info@schiele-vollmar.de
www.schiele-vollmar.de

59
Eltplan Vertriebs GmbH
Bohmter Straße 18
49152 Bad Essen
Phone +49 (0) 5472/94 15-0
Fax +49 (0) 5472/94 15-26
E-Mail info@eltplan-bad-essen.de
www.eltplan-bad-essen.de

62
KSA Komponenten der Steuerungs- und
Automatisierungstechnik GmbH
Pankstraße 8–10/Aufg. L
13127 Berlin
Phone +49 (0) 30/47 48 24 00
Fax +49 (0) 30/47 48 24 05
E-Mail info@ksa-gmbh.de
www.ksa-gmbh.de

64
IKS Ingenieur-Kontor-Sottrum GmbH
Hertzstraße 3
27367 Sottrum
Phone +49 (0) 4264/83 90-0
Fax +49 (0) 4264/83 90-90
E-Mail iks@iks-sottrum.de
www.iks-sottrum.de

66
IKS Ingenieur-Kontor-Sottrum GmbH
Hertzstraße 3
27367 Sottrum
Phone +49 (0) 4264/83 90-0
Fax +49 (0) 4264/83 90-90
E-Mail iks@iks-sottrum.de
www.iks-sottrum.de

67
AIV Komponenten und Komplettlösungen
für Industrie- und Gebäudetechnik
Pfarrer-Forster-Straße 5
85452 Moosinning
Phone +49 (0) 8123/922 50
Fax +49 (0) 8123/99 01 05
E-Mail info@aiv-albiez.de
www.aiv-albiez.de

68
Ingenieurbüro Krohz
Elektrotechnischer Vertrieb
Am Hahn 4
97483 Eltmann
Phone +49 (0) 9522/708 59 14
Fax +49 (0) 9522/30 14 96
E-Mail ing.buero@krohz.de

Concept and Design	Peter Schmidt Group GmbH
Photos	Michael Aust, xpo visuelle kommunikation, Bamberg
Typesetting	Peter Schmidt Group GmbH, Frankfurt am Main G. Peschke Druckerei GmbH, Munich
Lithography	Peter Schmidt Group GmbH, Frankfurt am Main Pixelwerk GmbH & Co. KG, Meeder
Production	G. Peschke Druckerei GmbH, Munich
Paper	Cover: Ensocoat, 300gm² Inside: Maxi Offset white, chlorine-free tcf, 110gm² Magazine: Luxosatin, chlorine-free tcf, wood-free matt coated illustration printing paper, 115gm²
Fonts	Thesis, TheSans (Lucas Fonts, Lucas DeGroot, 1990)

PHB 2011-001-01-2011-GBoP 40 462 000

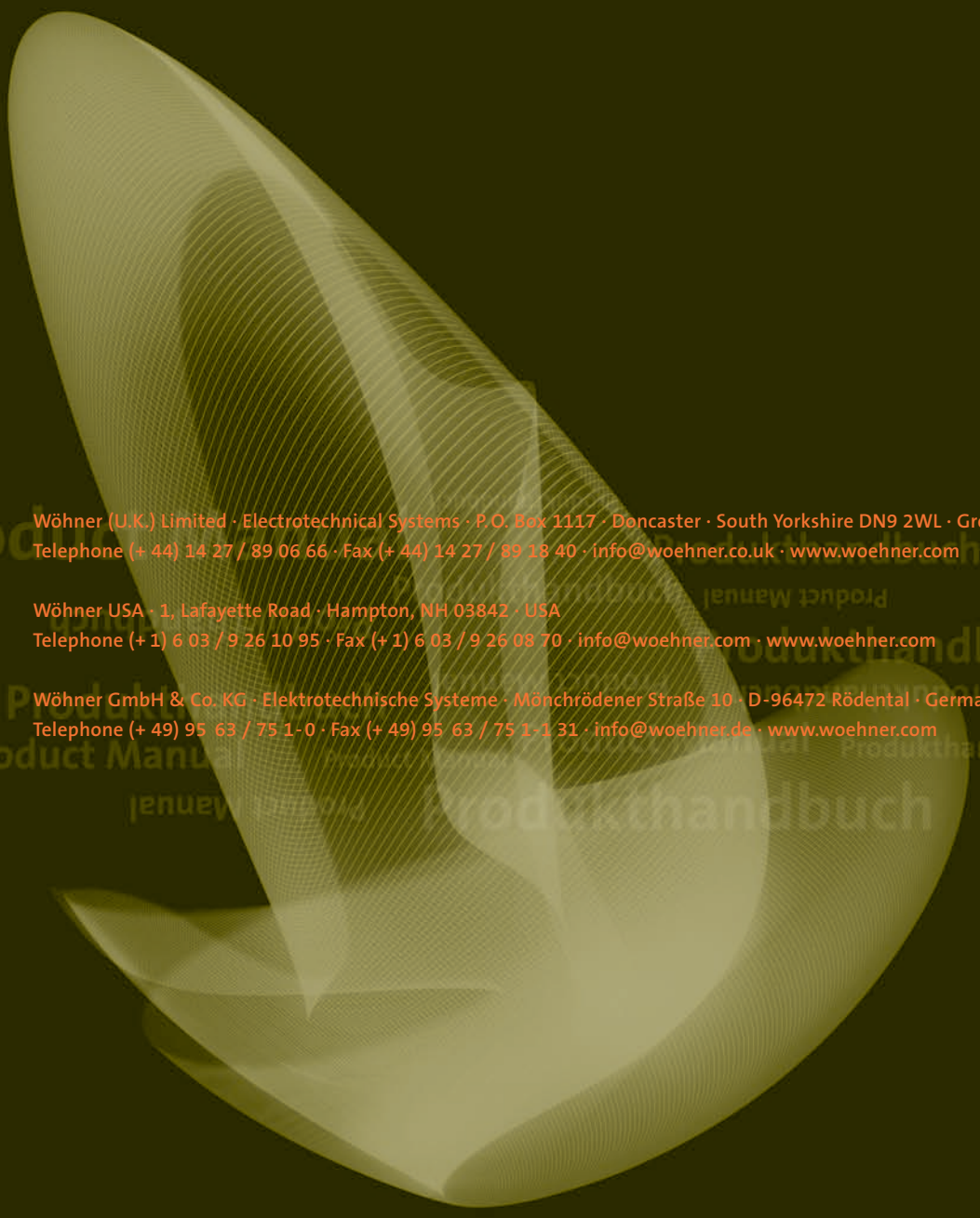

Wöhner (U.K.) Limited · Electrotechnical Systems · P.O. Box 1117 · Doncaster · South Yorkshire DN9 2WL · Great Britain
Telephone (+ 44) 14 27 / 89 06 66 · Fax (+ 44) 14 27 / 89 18 40 · info@woehner.co.uk · www.woehner.com

Wöhner USA · 1, Lafayette Road · Hampton, NH 03842 · USA
Telephone (+ 1) 6 03 / 9 26 10 95 · Fax (+ 1) 6 03 / 9 26 08 70 · info@woehner.com · www.woehner.com

Wöhner GmbH & Co. KG · Elektrotechnische Systeme · Mönchrödener Straße 10 · D-96472 Rödental · Germany
Telephone (+ 49) 95 63 / 75 1-0 · Fax (+ 49) 95 63 / 75 1-1 31 · info@woehner.de · www.woehner.com