TEMBREAK 2

MOULDED CASE CIRCUIT BREAKERS 16A TO 630A

1. Welcome to TemBreak 2
2. Ratings and Specifications
3. Operating Characteristics
4. Application Data
5. Accessories
6. Installation
7. Dimensions

TEMBREAK 2

MINI MOULDED CASE CIRCUIT BREAKERS 10A TO 100A

8. TemBreak 2 MINI Moulded Case Circuit Breakers

TEMBREAK

MOULDED CASE CIRCUIT BREAKERS 630A TO 1600A

9. TemBreak Moulded Case Circuit Breakers

- Easy Selection Guide 141
- Ratings and Specifications 143
- Operating Characteristics 147
- Electrical Control Using Internally Mounted Accessories 149
- Electrical Control Using Motor Operation 153
- Operating Handles 155
- Insulation Accessories 157
- Toggle Accessories 158
- Mechanical Interlocks 159
- Installation 160
- Dimensions 167

10. Order Codes

TEMBREAK MOULDED CASE CIRCUIT BREAKERS

EASY SELECTION GUIDE

The TemBreak range of products includes:

-Moulded Case Circuit Breakers
-Switch-Disconnectors
-A comprehensive range of accessories.

EXCEPTIONAL CURRENT LIMITING

Terasaki's ingenuity in current breaking is exemplified by the Fast Break Mechanism (FBM) of the TemBreak range.

The quick breaking performance of TemBreak provides exceptional current limiting characteristics.

F.B.M - Fast Break Mechanism → Provides → **Exceptional Current Limitation**

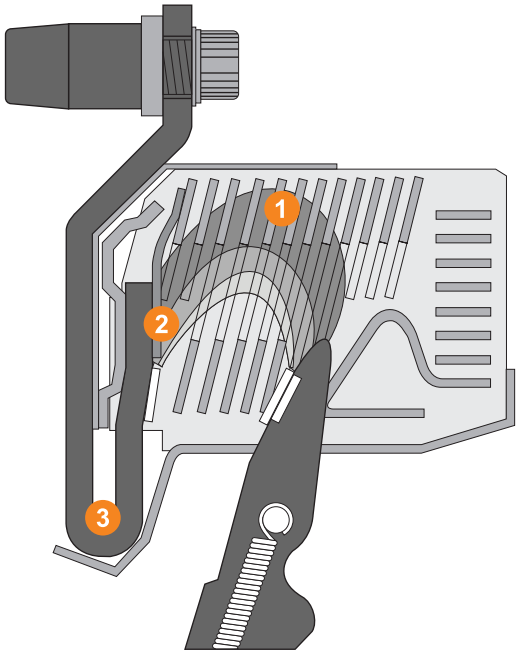

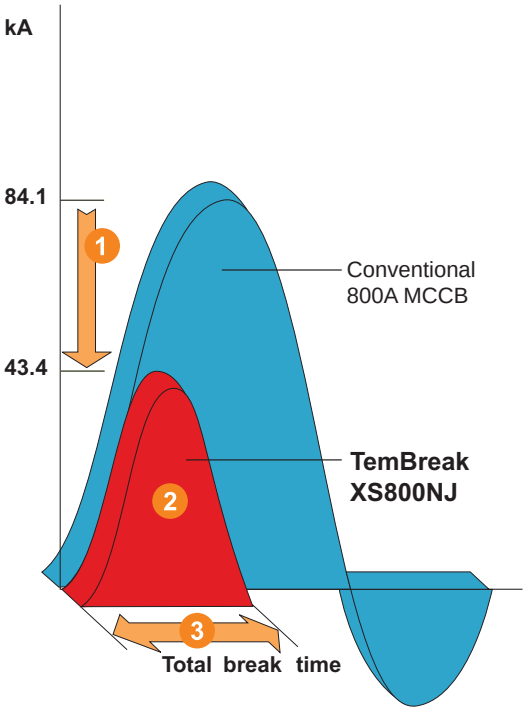

1. Quick-break arc chutes
2. Dual repulsive contacts
3. U-shaped conductors

Provides →

1. Reduced Peak let through minimises electrodynamic stress on conductors
2. Reduced i^2t energy let through minimises thermal stress on conductors
3. Reduced tripping time minimises damage after fault to both system and MCCB

EASY SELECTION GUIDE

Frame	Ratings (A)	800	1250	1600
50-100	125-630			
TemBreak 2 Moulded Case Circuit Breakers. Refer to Section 8	TemBreak 2 Moulded Case Circuit Breakers. Refer to Sections 1 to 7	**MCCBs**		

MCCBs

Model	Type	Icu (kA)
XS800	NJ	65
XS800	SE	50
XH800	SE	65
XH800	PJ	100
XH800	PE	65
TL800	NE	125

Model	Type	Icu (kA)
XS1250	CE	50
XS1250	SE	85
TL1250	NE	125

Model	Type	Icu (kA)
XS1600	CE	50
XS1600	SE	100

I_n (A)				
				1600
			1250 ↕ 1000	
		800 ↕ 630		
	630 ↕ 20			
10 ↕ 100				

Switch-Disconnectors

Model	Type
XS800	NN

Model	Type
XS1250	NN

Model	Type
XS1600	NN

Note: All breaking capacities are r.m.s. symmetrical at 400V AC

SECTION 9

RATINGS AND SPECIFICATIONS

TemBreak MCCB Electrical Characteristics to IEC 60947-2, EN 60947-2, JIS C 8201-2-1 Ann. 1, AS/NZS 3947-3, NEMA-AB1

Frame	Quantity	Unit	Condition	800	800
Model				XS800NJ	XS800SE
Number of Poles				3, 4	3, 4
Nominal current ratings					
	I_n	(A)	50°C	630, 800	800
Electrical characteristics					
Rated operational voltage	U_e	(V)	AC 50/60 Hz	690	690
			DC	250	-
Rated insulation voltage	U_i	(V)		690	690
Rated impulse withstand voltage	U_{imp}	(kV)		8	8
Ultimate breaking capacity (IEC, JIS, AS/NZS)	I_{cu}	(kA)	690V AC*	20	20
			440V AC	50	50
			415V AC	50	50
			380/400V AC	65	50
			220/240V AC	85	85
			250V DC	50	-
Service breaking capacity (IEC, JIS, AS/NZS)	I_{cs}	(kA)	690V AC*	10	10
			440V AC	25	25
			415V AC	25	25
			380/400V AC	33	25
			220/240V AC	43	43
			250V DC	25	-
Rated short-time withstand current	I_{cw}	(kA rms)	0.3 Seconds	-	10
Rated breaking capacity (NEMA)		(kA)	480V AC	50	50
			240V AC	85	85
Protection					
Adjustable thermal, adjustable magnetic				■	
Fixed hydraulic, fixed magnetic					
Microprocessor					■
Utilisation category				A	B
Installation					
Front connection (FC)				■	■
Attached flat bar (FB)				●	●
Solderless terminal (cable clamp)				●	●
Rear connection (RC)				●	●
Plug-in (PM)				●	●
Draw-out (DR)				●	●
DIN rail mounting (DA)				-	-
Dimensions	h	(mm)		273	273
	w	(mm)	3 pole	210	210
			4 pole	280	280
	d	(mm)		103	103
Weight	w	(kg)	3 pole	9.4	9.7
			4 pole	12.2	12.5
Operation					
Toggle operation				■	■
Variable depth/direct mount operating handle (HB/HP)				●	●
Motor operator (MC)				●	●

■ Standard ● Optional - Not Available

*MCCBs cannot be used in IT earthed systems at this voltage.

	800	800	800	1600	1250	1250	1600	1600	1600	
	XH800SE	XH800PJ	XH800PE	TL800NE	XS1250CE	XS1250SE	TL1250NE	XS1600CE	XS1600SE	>1600
	3, 4	3, 4	3, 4	3, 4	3, 4	3, 4	3, 4	3, 4	3, 4	Visit www.terasaki.com for details of MCCBs up to 2500A
	800	630, 800	630, 800	630, 800	1000, 1250	1000, 1250	1000, 1250	1600	1600	
	690 - 690 8	690 250 690 8	690 - 690 8	690 - 690 8	690 - 690 8	690 - 690 8	690 - 690 8	690 - 690 8	690 - 690 8	
	20 65 65 65 100 -	45 85 85 100 125 50	20 65 65 65 100 -	45 125 125 125 150 -	20 50 50 50 85 -	25 65 65 85 100 -	45 125 125 125 150 -	20 50 50 50 85 -	45 85 85 100 125 -	
	10 33 33 33 50 -	23 43 50 50 63 25	10 50 50 50 50 -	34 70 70 70 113 -	10 25 25 25 43 -	19 50 50 65 75 -	34 65 65 70/65 113 -	10 25 25 25 43 -	34 65 65 75 94 -	
	10 65 85	- 50 85	10 65 85	15 75 150	15 50 85	15 65 85	15 75 150	20 50 85	20 85 125	
	■ B	■ A	■ B	■ B	■ B	■ B	■ B	■ B	■ B	
	■ ● ● ● ● ● - 273 210 280 103 9.7 12.5	■ ● ● ● ● ● - 273 210 280 103 9.4 12.2	■ ● ● ● ● ● - 273 210 280 103 9.7 12.5	- ■ - ● ● ● - 370 210 280 140 25.8 33.5	- ■ - ● ● ● - 370 210 280 120 22.0 28.0	- ■ - ● ● ● - 370 210 280 120 22.0 28.0	- ■ - ● ● ● - 370 210 280 140 26.0 33.7	- ■ - ● - ● - 370 210 280 140 27.0 35.0	- ■ - ● - ● - 370 210 280 140 27.0 35.0	
	■ ● ●	■ ● ●	■ ● ●	■ ● ●	■ ● ●	■ ● ●	■ ● ●	■ ● ●	■ ● ●	

RATINGS AND SPECIFICATIONS

TemBreak Switch-Disconnectors Electrical Characteristics to IEC 60947-3, EN 60947-3, AS/NZS 3947-3

Frame	Quantity	Unit	Condition	800	1250
Model				XS800NN	XS1250NN
Number of Poles				3, 4	3, 4
Nominal current ratings					
	I_n	(A)		800	1250
Electrical characteristics					
Rated operational voltage	U_e	(V)	AC 50/60 Hz	690	690
			DC	250	250
Rated insulation voltage	U_i	(V)		690	690
Rated impulse withstand voltage	U_{imp}	(kV)		8	8
Rated short-circuit making capacity	I_{cm}	(kA peak)		15	32
Rated short-time withstand current	I_{cw}	(kA rms)	0.3 Seconds	9.6	15
Utilisation category			AC	AC-23A	AC-23A
Installation					
Front connection (FC)				■	-
Attached flat bar (FB)				●	■
Solderless terminal (cable clamp)				●	-
Rear connection (RC)				●	●
Plug-in (PM)				●	●
Draw-out (DR)				●	●
DIN rail mounting (DA)				-	-
Dimensions	h	(mm)		273	370
	w	(mm)	3 pole	210	210
			4 pole	280	280
	d	(mm)		103	120
Weight	w	(kg)	3 pole	9.4	20.4
			4 pole	12.2	26.4
Operation					
Toggle operation				■	■
Variable depth/direct mount operating handle (HB/HP)				●	●
Motor operator (MC)				●	●

■ Standard ● Optional - Not Available

	1600
	XS1600NN
	3, 4
	1600
	690 250 690 8
	45 20 AC-23A
	- ■ - ● - ● - 370 210 280 140 24.9 32.9
	■ ● ●

OPERATING CHARACTERISTICS

800A Frame MCCBs

Time/current characteristic curves

XS800NJ, XH800PJ

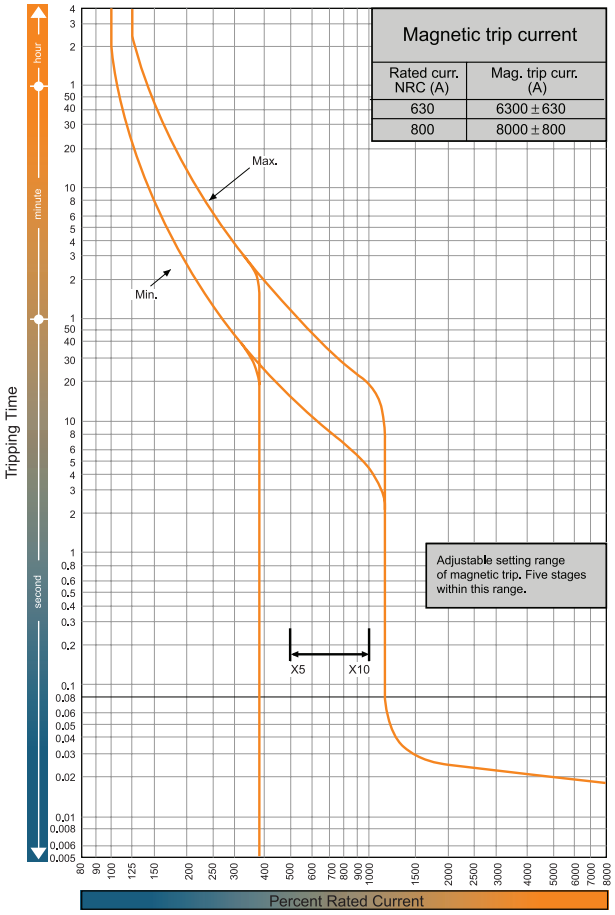

Time/current characteristic curves

XS800SE, XH800SE, XH800PE

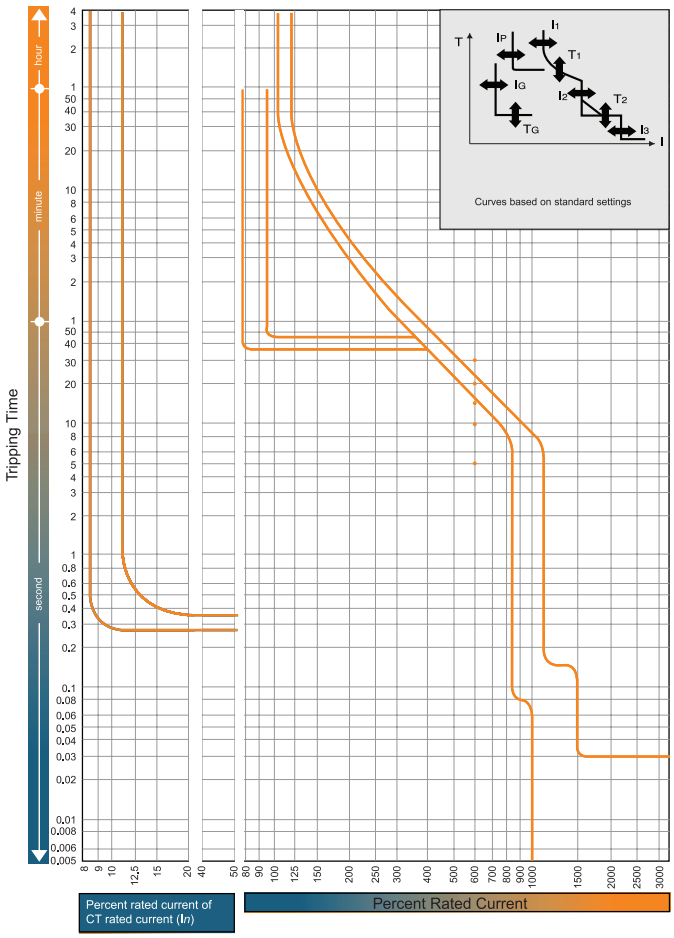

Ambient compensating curves

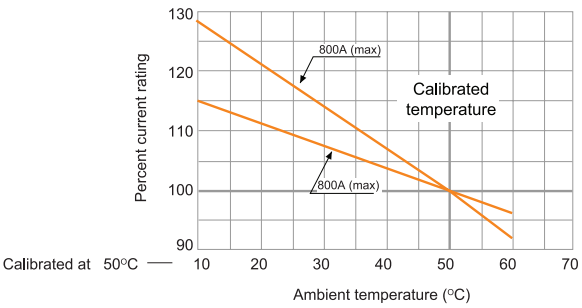

Over current tripping characteristics

CT rated current (A) (In)	630,800
Base current setting (A): (Io)	(In) x (0.63-0.8-1.0)
Long time-delay pick-up current (A): (I_1)	(Io) x (0.8-0.85-0.9-0.95-1.0) Non-tripping at (I_1) setting x 105% and below. Tripping at 125% & above.
Long time-delay time settings (S) (T_1)	(5–10–15–20–30) at (I_1) x 600% current. Setting tolerance ± 20%
Short time-delay pick-up current (A): (I_2)	(Io) x (2-4-6-8-10) Setting tolerance ± 15%
Short time-delay time settings (S) (T_2)	Opening time (0.1, 0.15, 0.2, 0.25, 0.3) in the definite time-delay. Total clearing time is + 50 mS and resettable time -20mS for the time-delay setting.
Instantaneous trip pick-up current (A) (I_3)	Continuously adjustable from (Io) x (3 to12) Setting tolerance ± 20%
* Pre-trip alarm pick-up current (A) (I_P)	(I_1) x (0.7, 0.8, 0.9, 1.0) Setting tolerance ±10%
* Pre-trip alarm time setting (S) (T_P)	40 fixed definite time-delay.Setting tolerance ±10%
* Ground fault trip pick-up current (A): (I_G)	Continiuously adjustable from (In) x (0.1 to 0.4) Setting tolerance ± 15%
* Ground fault trip time setting (S): (T_G)	Opening time (0.1-0.2-0.3-0.4-0.8) in the definite time-delay. Total clearing time is + 50mS and resettable time is - 20mS for the time-delay settings

Note: * Optional
Note: The underlined values will be applied as standard ratings unless otherwise specified when ordering.

OPERATING CHARACTERISTICS

1250A and 1600A Frame MCCBs

Time/current characteristic curves

TL800NE, XS1250CE, XS1250SE, TL1250NE, XS1600CE, XS1600SE

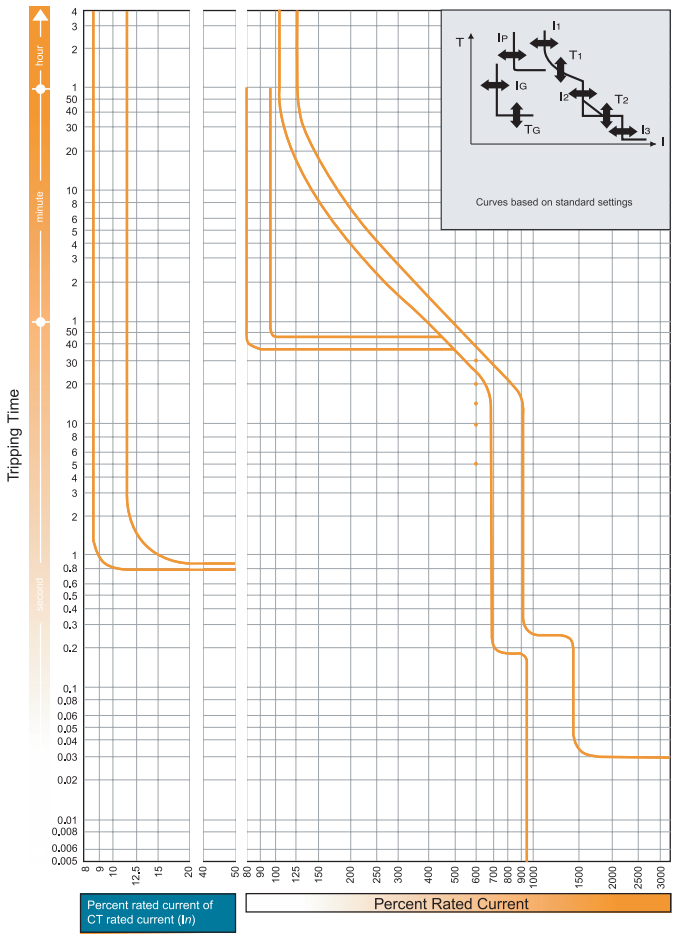

Over current tripping characteristics

CT rated current (A) (In)	630, 800, 1000, 1250, 1600, 2000, 2500
Base current setting (A): (Io)	(In) x (0.63-0.8-1.0)
Long time-delay pick-up current (A): (I_1)	(Io) x (0.8-0.85-0.9-0.95-1.0) Non-tripping at (I_1) setting x 105% and below. Tripping at 125% & above.
Long time-delay time settings (S) (T_1)	(5–10–15–20–30) at (I_1) x 600% current. Setting tolerance ± 20%
Short time-delay pick-up current (A): (I_2)	(Io) x (2-4-6-8-10) Setting tolerance ± 15%
Short time-delay time settings (S) (T_2)	Opening time (0.1, 0.15, 0.2, 0.25, 0.3) in the definite time-delay. Total clearing time is + 50 mS and resettable time -20mS for the time-delay setting.
Instantaneous trip pick-up current (A) (I_3)	Continuously adjustable from (Io) x (3 to 12) Setting tolerance ± 20%
* Pre-trip alarm pick-up current (A) (I_P)	(I_1) x (0.7, 0.8, 0.9, 1.0) Setting tolerance ±10%
* Pre-trip alarm time setting (S) (T_P)	40 fixed definite time-delay.Setting tolerance ±10%
* Ground fault trip pick-up current (A): (I_G)	Continiuously adjustable from (In) x (0.1 to 0.4) Setting tolerance ± 15%
* Ground fault trip time setting (S): (T_G)	Opening time (0.1-0.2-0.3-0.4-0.8) in the definite time-delay. Total clearing time is + 50mS and resettable time is - 20mS for the time-delay settings

Note: * Optional
Note: The underlined values will be applied as standard ratings unless otherwise specified when ordering.

ELECTRICAL CONTROL USING INTERNALLY MOUNTED ACCESSORIES

Shunt Trip (SHT)

Remote tripping of the breaker

Undervoltage Trip (UVT)

Automatically trips the breaker when the circuit voltage falls below pre-set value. Remote tripping of the breaker is also possible.
Note: The UVT controller is installed externally, when provided with AC UVT. (Refer to Dimensions)

Note: The SHT and UVT cannot be mounted in the same breaker.

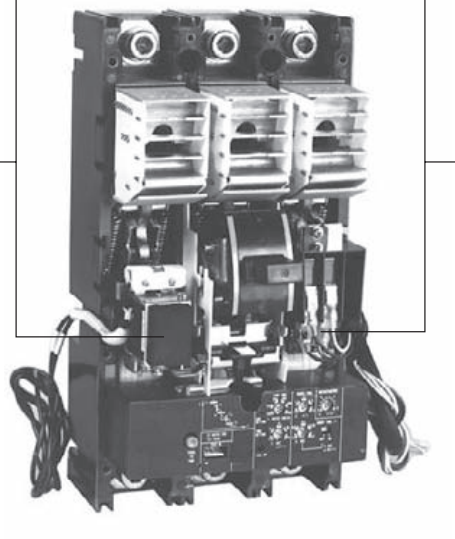

Auxiliary Switch (AX)

Electrically indicates On/Off status of the breaker.

Alarm Switch (AL)

Electrically indicates when the breaker is in the "Tripped" state.

Overview of Internally Mounted Accessories

ELECTRICAL CONTROL USING INTERNALLY MOUNTED ACCESSORIES

Valid Combinations of Internally Mounted Accessories

Accessory Combinations

Breaker type

XS800NJ
XS800SE
XH800SE
XH800PJ
XH800PE
TL800NE
XS1250CE
XS1250SE
TL1250NE
XS1600CE
XS1600SE

Internally mounted accessories

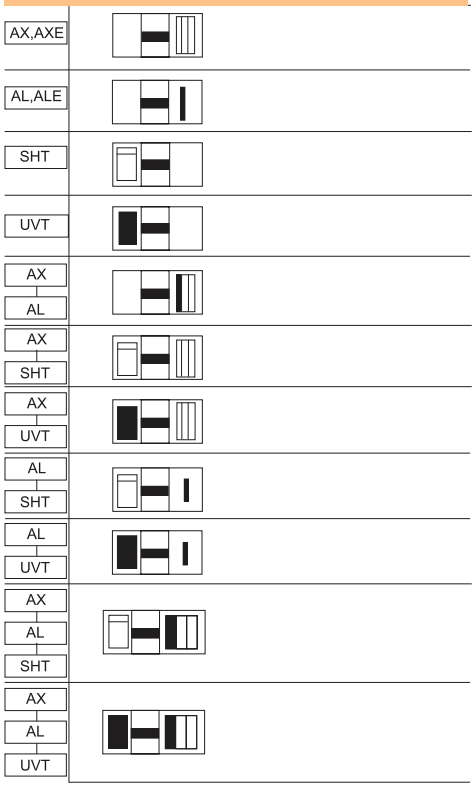

Key:

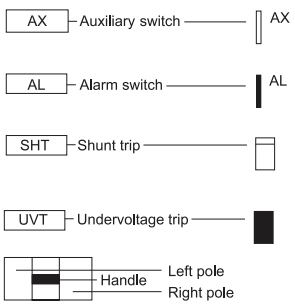

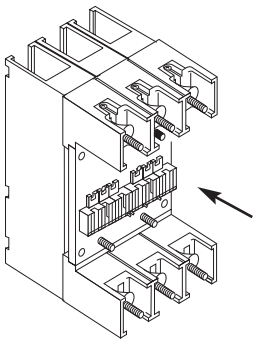

Accessory Combinations for Plug-in MCCBs

Frame (A)		800-1250A Frame	
Number of auxiliary terminals to be installed (maximum)			
SHT	LINE		S1 S2
	LOAD		
UVT	LINE		P1 P2
	LOAD		
1AB	LINE	AXc1 AXa1 AXb1	
	LOAD		
2AB	LINE	AXc1 AXa1 AXb1	
	LOAD	AXc2 AXa2 AXb2	
3AB	LINE	AXc1 AXa1 AXb1 AXc3	
	LOAD	AXc2 AXa2 AXb2 AXa3 AXb3	
SHT & 1AB	LINE	AXc1 AXa1 AXb1	S1 S2
	LOAD		
SHT & 2AB	LINE	AXc1 AXa1 AXb1 AXc2 AXa2	AXb2 S1 S2
	LOAD		
SHT & 3AB	LINE	AXc1 AXa1 AXb1 AXc3	S1 S2
	LOAD	AXc2 AXa2 AXb2 AXa3 AXb3	
UVT & 1AB	LINE	AXc1 AXa1 AXb1	P1 P2
	LOAD		
UVT & 2AB	LINE	AXc1 AXa1 AXb1 AXc2 AXa2	AXb2 P1 P2
	LOAD		
UVT & 3AB	LINE	AXc1 AXa1 AXb1 AXc3	P1 P2
	LOAD	AXc2 AXa2 AXb2 AXa3 AXb3	
ALT & 1AB	LINE	AXc1 AXa1 AXb1 ALc1 ALa1	ALb1
	LOAD		
ALT & 2AB	LINE	AXc1 AXa1 AXb1 AXc2 AXa2	AXb2 ALc1 ALa2 ALb1
	LOAD		
UVT & ALT & 1AB	LINE	AXc1 AXa1 AXb1 ALc1 ALa2	ALb2 P1 P2
	LOAD		
UVT & ALT & 2AB	LINE	† AXc1 AXa1 AXb1 AXc2 AXa2	AXb2 ALc1 ALa2 P1 P2
	LOAD		
SHT & ALT & 1AB	LINE	AXc1 AXa1 AXb1 ALc1 ALa1	ALb1 S1 S2
	LOAD		
SHT & ALT & 2AB	LINE	† AXc1 AXa1 AXb1 AXc2 AXa2	AXb2 ALc1 ALa1 S1 S2
	LOAD		
ALT	LINE	ALc1 ALa1 ALb1	
	LOAD		
SHT & ALT	LINE	ALc1 ALa1 ALb1	S1 S2
	LOAD		
UVT & ALT	LINE	ALc1 ALa1 ALb1	P1 P2
	LOAD		

† : Alarm switch is an 'a' contact only
Note 1 : DC UVT without controller will have terminals U_1 and U_2
Note 2 : AXc1, AXc2 Due to restricted space, these terminals are common

The arrangements shown above represent the view on the arrow, that is, looking at the MCCB body from the rear.

ELECTRICAL CONTROL USING INTERNALLY MOUNTED ACCESSORIES

Connection Diagrams and Terminal Numbers

Shunt trip (SHT)	3, 4P Provided with anti-burn switch		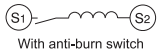
Undervoltage trip (UVT)	3, 4P	AC rated voltage	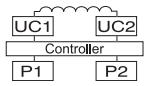
		DC rated voltage	
Auxiliary switch (AX)	3, 4P	No. of mountings 1 unit	
		2 units	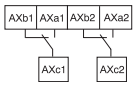
		3 units	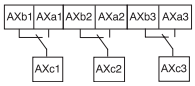
		4 units	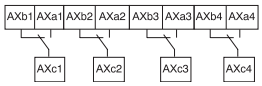
		5 units	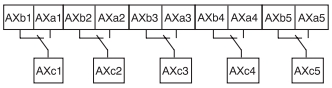
		6 units	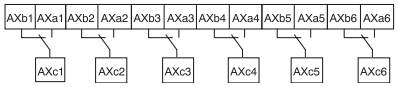
Alarm switch (AL)	3, 4P		

Ratings of Auxiliary Switches (AX) and Alarm Switches (AL)

AC	Voltage (V)		480	250	125
	Current (A)	Resistive load	3	5	5
		Lamp load	0.3	1.5	2
		Inductive load	2	5	5
		Motor load	0.4	2	3
DC	Voltage (V)		250	125	30
	Current (A)	Resistive load	0.3	0.6	5
		Lamp load	0.05	0.1	3
		Inductive load	0.3	0.6	4
		Motor load	0.05	0.1	3

ELECTRICAL CONTROL USING INTERNALLY MOUNTED ACCESSORIES

Operation of Auxiliary and Alarm Switches

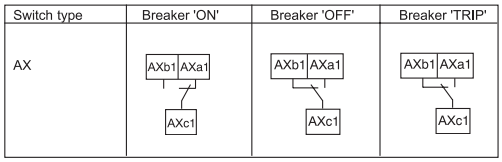

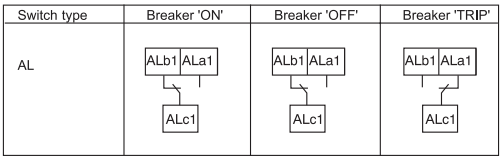

Ratings of Shunt Trips

Rate voltage:	Exciting coil current [peak value (A)] Values at the highest voltage (60Hz for AC use)					
	110-115VAC	200-480VAC	24VDC	48VDC	100-115VDC	200-230VDC
	1.1	0.93	2.52	1.55	0.67	0.35

Note: AC rated, permissible operating voltage range is 85 to 110%. DC 75 to 125%.
Note: Special voltages available on request. Contact Terasaki for details.

Ratings of Undervoltage Trips

Rated voltage:	Power supply, VA (with UVT controller			Exciting coil current (mA)	
	100-120VAC	200-240VAC	300-450VAC	24VDC	100-115VDC
	5VA	5VA	5VA	22.7	6.0

Note: Tripping voltage is 35-70% of the rated voltage. Resettable voltage is 85% or less, of the rated voltage.
Note: Special voltages available on request. Contact Terasaki for details

If the UVT is for AC use, an external controller will be installed. The controller is fitted to the left side of the breaker as standard. The controller may be installed separately if required (please specify location). Separate installation is necessary when mechanical interlocks are fitted. UVT controllers incorporating time delay units are also available (contact us for details). Refer to dimensions of terminal blocks for the mounting positions of UVT controllers.

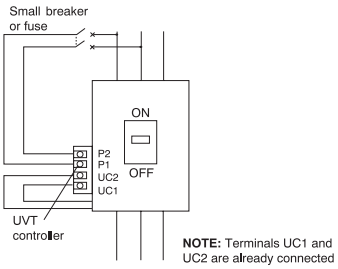

Connection of UVT Controller

Termination of Control Wiring

Leads for internally mounted accessories can be connected to the terminal block. Each terminal block has six terminals. Terminal arrangements are standardised. Refer to dimensions for standard terminal arrangements.

ELECTRICAL CONTROL USING MOTORISED OPERATION

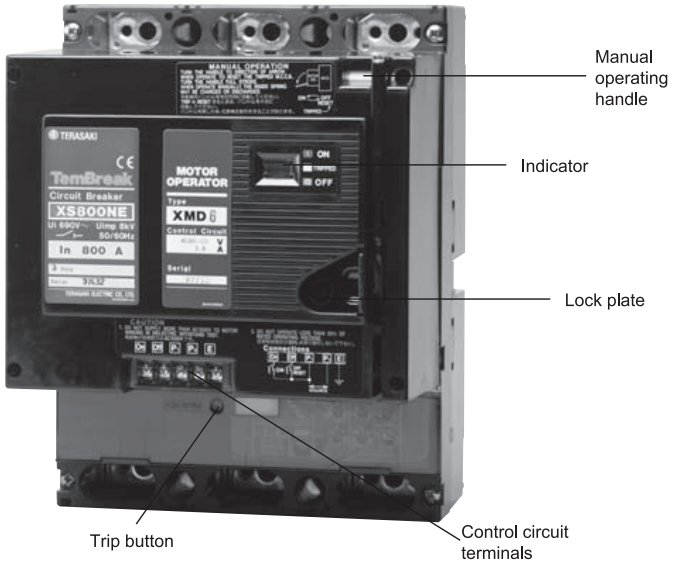

Type XMD6, XMD9

Positive contact indication

Colour coding indicates the true position of the contacts clearly: ON (red), OFF (green), TRIP (white).

Easy maintenance

Breaker mounting, removal, and even setting changes can be done without removing the motor operator.

Manual ON/OFF operation with one stroke

Fast closing operation

Closing in 60ms or less. The closing time remains constant over repeated operations.

Ratings and Specifications

Type of Motor Operators			XMD6	XMD9
Applicable Breakers			XS800NJ	TL800NE
			XS800SE	XS1250CE
			XH800SE	XS1250NE
			XH800PJ	TL1250NE
			XH800PE	XS1600CE
				XS1600NE
Rated Operating Voltage (V)	AC	100-115V 50/60Hz	•	•
		200-230V 50/60Hz	•	•
	DC	100-110V	•	•
		24V	•	•
Lock in "OFF" position (standard)			•	•
Manual Trip Button			*	*
Steady-state r.m.s. Amp/inrush Amp (A)	AC100	ON ①	–/3.1	–/3.1
	-115V	OFF, RESET ①	1.8/6.0	1.8/6.0
	AC200	ON ②	–/1.2	–/1.2
	-230V	OFF, RESET ②	1.0/3.2	1.0/3.2
	DC100	ON ③	–/0.8	–/0.8
	-110V	OFF, RESET ③	1.1/4.2	1.1/4.2
	DC24V	ON	–/4.5	–/4.5
		OFF, RESET	4.0/12.0	4.0/12.0
Type of operation			Spring Charged	Spring Charged
Operating Time(s)	ON (Maximum values)		0.06	0.06
	OFF, RESET ④		3	3
Control Switch Ratings			250V, 5A	250V, 5A
Power Source Capacity (VA)			300VA	300VA
Dielectric withstand voltage The value in brackets for 24V DC			AC1500V (AC500V)	AC1500V (AC500V)
Weight (kg)			5.6	6.4

* Trip button on breaker to be used (accessible with motor fitted)

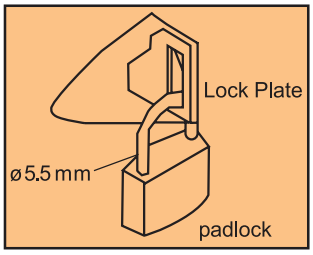

The breaker can be padlocked in the "OFF" position by pulling out the lock plate, and locking it with a padlock.
When the breaker is "ON", the lock plate cannot be pulled out.
Up to three locks can be used.
Padlocks not supplied.

NOTE
- • : Yes or available
- ① : Maximum values at AC115V, 50Hz
- ② : Maximum values at AC230V, 50Hz
- ③ : Maximum values at DC110V
- ④ : Maximum values at the rated operating voltages

ELECTRICAL CONTROL USING MOTORISED OPERATION

Motorised operation

ON CONTROL
When the ON switch is closed, the latch release coil (LRC) is excited and the closing spring is released. The breaker quickly closes and goes into ON status. When the closing spring is released, the limit switch (LS) is opened and the LRC is de-excited.

OFF CONTROL
When the off switch is closed, self-hold control relay (Y) is activated and motor (M) operates to charge the closing spring. The breaker changes to OFF status.

RESET CONTROL
When the breaker is in TRIP status, closing the OFF switch activates self-hold control relay (Y) and starts motor (M). Motor (M) charges the closing spring and resets the breaker.

Manual operation

ON, OFF (RESET)
The breaker can be opened (OFF or RESET) and closed (ON) alternately by pulling the operating lever down in one full stroke. ON/OFF operation of the breaker is possible without charging or releasing the closing spring.

Emergency Trip
Opening the breaker (OFF) using the motor operator takes up to 3 seconds. If a remote emergency OFF function is necessary, incorporate the shunt trip device (SHT) or the undervoltage trip device (UVT) into the breaker.

PRECAUTIONS REGARDING USAGE

- If using the UVT option, be sure to reset the UVT before closing the breaker.
- The motor operator must be supplied with voltage within the following range:
  DC: 75-110% of rated voltage
  AC: 85-110% of rated voltage
  Operation at low voltage may burn out the motor.

Anti-pumping function

When the breaker is turned ON and the closing spring is released, self-hold control relay X is activate. Xa-contact is held closed, and Xb-contact is opened. While the ON switch is closed, latch release coil (LRC) will not be excited even if the OFF switch is closed or an automatic reset circuit is being used. Pumping is thus prevented.

Automatic charge/discharge function

If the breaker is closed manually (ON) while the power source is on, the handle switch (HS) induces automatic release of the closing spring. Likewise, if the breaker is opened manually (OFF), the springs are automatically charged. If the breaker is opened or closed while the power source is off, later when the power source is turned on, the closing spring will automatically be charged or discharged to match the ON/OFF status of the breaker. This automatic charge/discharge function is necessary to prepare the closing mechanism for the next ON/OFF operation. The sound of the charging or discharging of the spring should not be mistaken for a malfunction.

Automatic reset

An alarm switch (a-contact) fitted in the breaker, can be used to induce recharging of the closing spring and automatically reset the MCCB. Connect the automatic reset circuit as shown below.

It is recommended that a time delay of approximately 3 minutes is introduced to the automatic reset circuit for thermal magnetic MCCB's. In the event of an overload trip this will prevent the motor operator repeatedly driving the MCCB between the tripped and reset positions while the thermal element is hot.

If an alarm signal is also required for external control, use a 2 alarm switch combination.

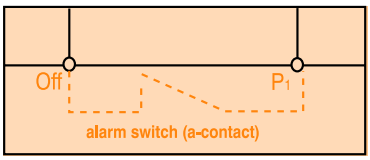

Control circuit AC and DC

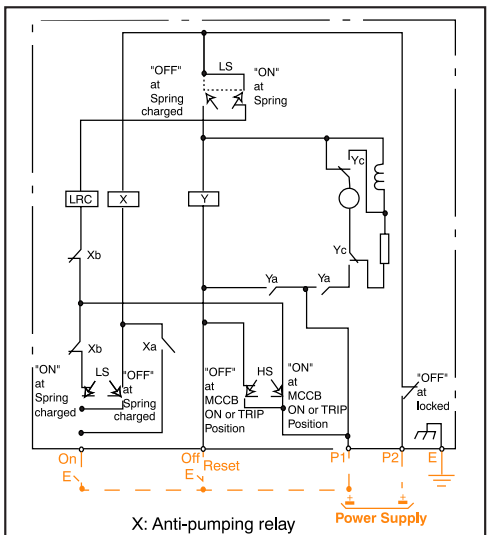

X: Anti-pumping relay
Y: OFF signal self-holding relay
LRC: Latch release coil (closing coil)
M: Motor
m : Field coil
HS: Breaker handle position switch

Note: Customer wiring shown in orange

OPERATING HANDLES

Door Mounted Handle

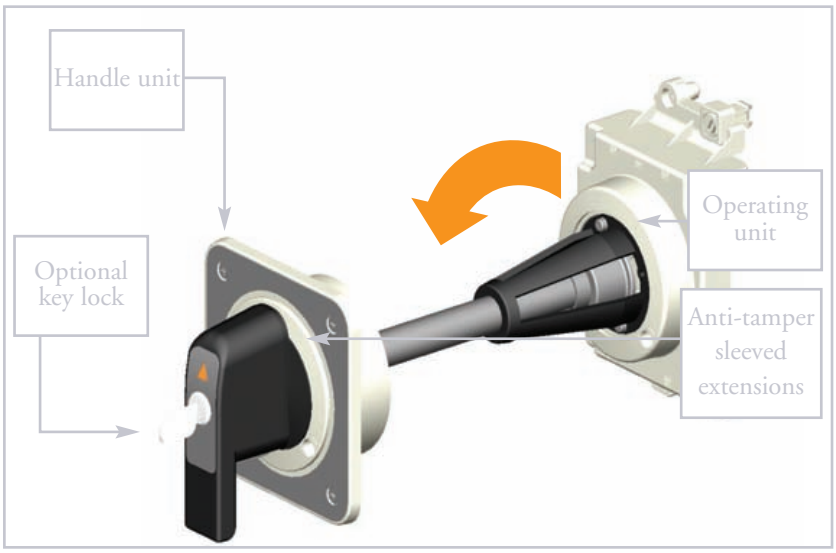

Door Mounted Handle with Optional Keylock

The door mounted operating handle is used to operate a circuit breaker mounted inside a cubicle from outside the door. It consists of an operating mechanism that is mounted on the breaker, an operating handle that is mounted on the door, and a shaft that transmits the turning force from the handle to the operating unit. The shaft can be cut to the required length.

The appearance and operation of this handle match those of the door mounted handle for Tembreak 2 MCCBs (details in Section 5).

This means that a switchboard containing a combination of TemBreak and TemBreak 2 MCCBs from this catalogue can be operated with handles which all look the same, and work the same way.

OPERATING HANDLES

Breaker Mounted Handle (OHJ)

90° ON/OFF OPERATION.

The handle operation and ON/OFF indicator are the same irrespective of the breaker mounting direction, being vertical or horizontal. This also applies to the panel cut-out.

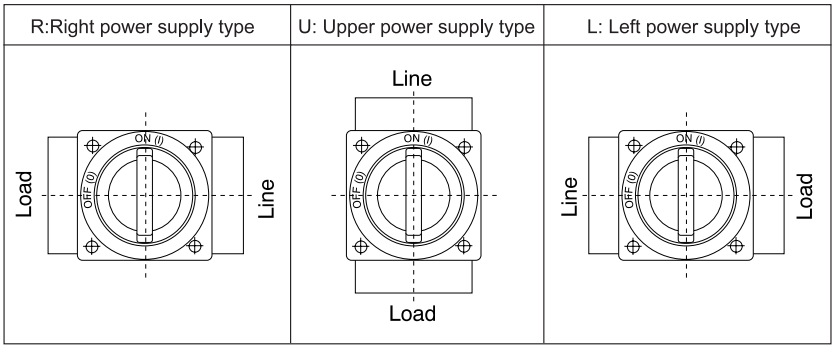

Double insulation structure

Provides an even higher degree of safety.

Panel lock mechanism

The panel door cannot be opened when the handle is in the ON or OFF position. The panel door can only be opened in the RESET position.

•Equipped with a lock (reverse interlock) mechanism which does not permit the breaker to be closed while the panel door is opened. The lock can be released.

•When the panel lock release is turned counterclockwise the panel door can be opened even when the handle is in the ON or OFF position.

Handle Lock Mechanism

The handle can be locked in the ON or OFF position. Upto 3 padlocks can be fitted (padlock not supplied).

Ordering code

Please specify the correct type code when ordering

TFJXX – U

Mounting Direction	
U	Upper power supply
L	Left hand power supply
R	Right hand power supply

Additional Options

Please specify at the time of ordering

	Standard	Option
Colour	Black	Yellow base Red handle
IP	3X	55

INSULATION ACCESSORIES

Terminal Covers

Terminal covers prevent exposure of terminals and other live parts.

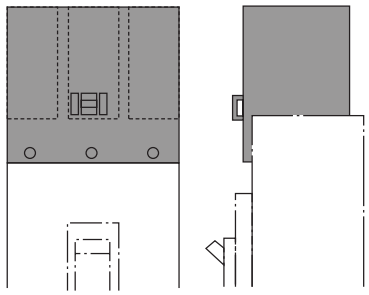

Terminal Covers for Front Connection.

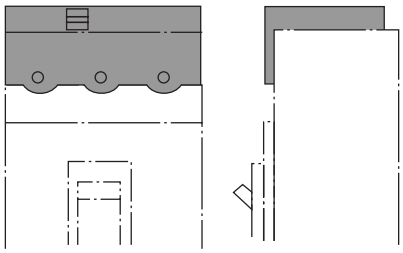

Terminal Covers for Rear Connection and Plug-in.

Interpole Barriers

Interpole barriers provide maximum insulation between phases at the terminals of the MCCB. They can not be fitted at the same time as any of the terminal covers. Interpole barriers can easily be fitted to either end of an MCCB.

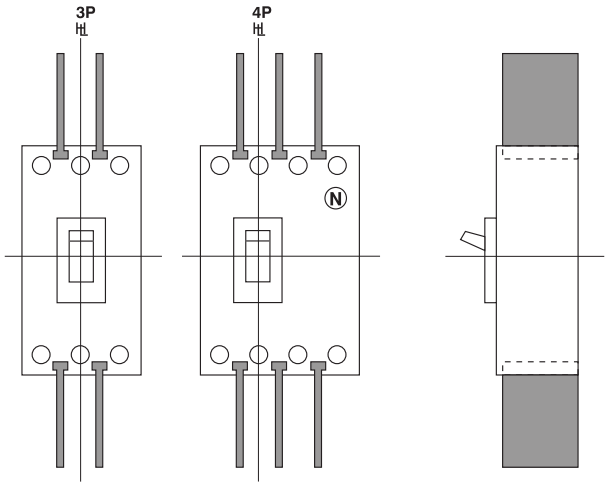

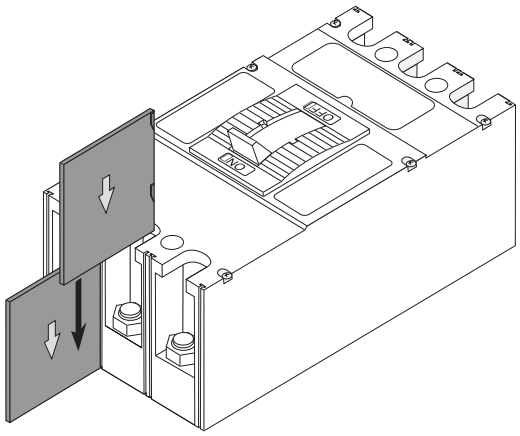

Interpole Barriers

TOGGLE ACCESSORIES

Toggle Extension

The toggle extension provides extra leverage for the operator when performing manual ON, OFF and RESET operations.

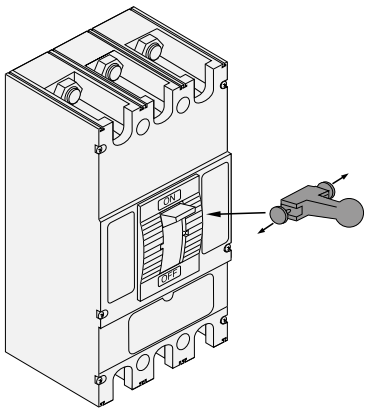

Toggle Extension

Toggle Lock

The toggle lock enables padlocking of the MCCB in either the ON or OFF position. Padlocks are not supplied.

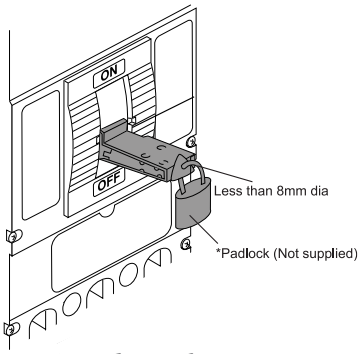

Toggle Lock

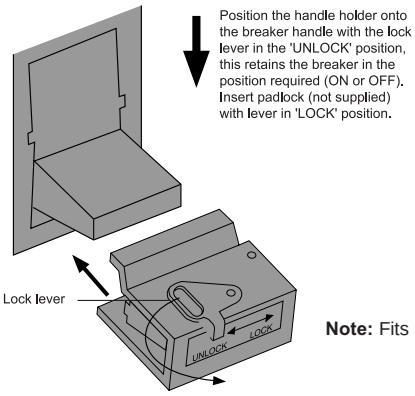

Note: Fits up to three padlocks

Key Lock

MCCBs , including those fitted with door mounted handles and some motor operators can be supplied with Castell locking systems. Contact us for details.

Door Flange

A door flange provides a neat finish for the toggle cutout on the outside of the panel door.

MECHANICAL INTERLOCKS

Rear Mechanical Interlocks

Rear interlocks consist of a mechanism mounted at the back of each MCCB of an adjacently mounted pair. The interlock inhibits the closure of one MCCB if the other is already in the ON position. MCCBs cannot be mounted directly to a flat plate, but are installed on a frame to ensure space for the interlock mechanism.

Two MCCBs or switch-disconnectors of the same frame size may be rear interlocked.

An operating handle or motor operator can be fitted to an MCCB with rear interlock.

Wire Mechanical Interlock

Wire interlocks consist of two mechanisms connected by a cable. The mechanisms are mounted on the back of two MCCBs located at a distance from each other which is limited by the length and bend radius of the cable. The mechanisms inhibit the closure of one MCCB if the other is already in the ON position. MCCBs cannot be mounted directly to a flat plate, but are installed on a frame to ensure space for the interlock mechanism.

Any two of the TemBreak MCCBs or switch disconnectors featured in this catalogue may be wire interlocked.

An operating handle or motor operator can be fitted to an MCCB with rear interlock.

TemTransfer Automatic Changeover Controller

TemBreak MCCBs can be configured to provide automatic supply changeover. They are compatible with the TemTransfer changeover controller. Refer to section 5 for details.

Front Mechanical Interlock

Front interlocks are manually operated toggle locking devices which can be installed between two adjacent MCCBs. Depending on the position of the interlock, one or other of the MCCBs is inhibited from being in the ON position.

Two MCCBs or switch-disconnectors of the same frame size may be front interlocked.

Operating handles and motor operators cannot be fitted to MCCBs with front mechanical interlocks.

INSTALLATION

Connection of Busbars and Terminated Cables

This method is standard for 800A frame models. Solid conductors or cables terminated with compression terminals can be used.

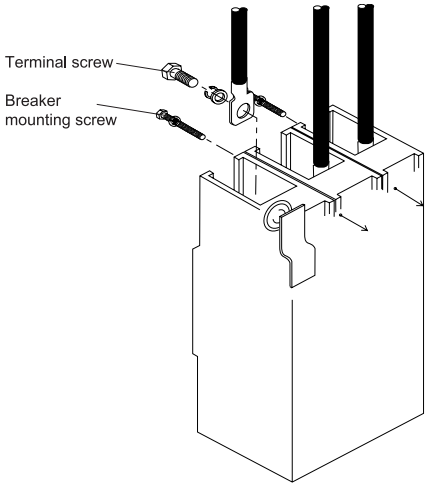

Connection of Large Conductors and Multiple Conductors

Flat bars are terminal extensions which can be fitted to line or load side terminals and are used to connect large conductors and multiple conductors. Optional for 800A frame, standard for 1250A and 1600A frame models.

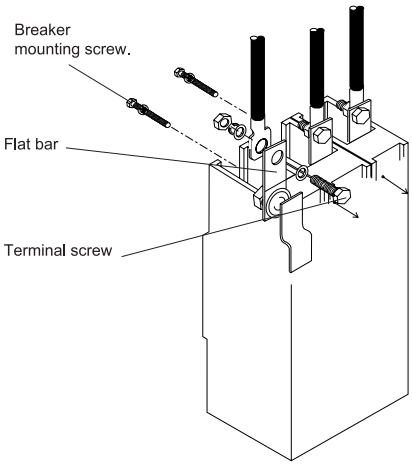

INSTALLATION

Termination in a Separate Compartment

Rear connections allow termination of conductors in a different switchboard compartment to the MCCB body. Optional.

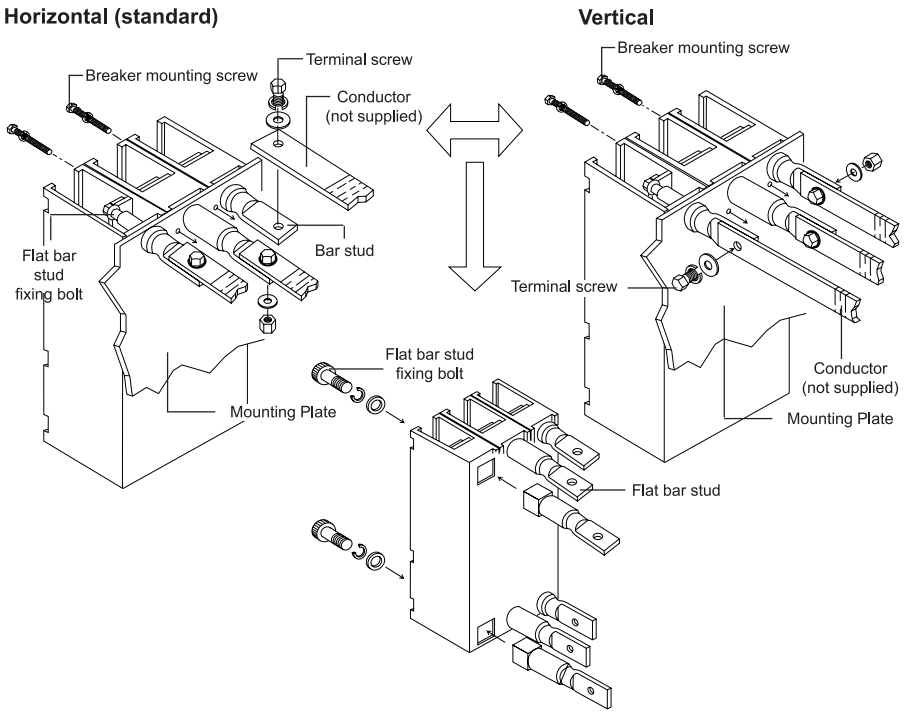

Rear Connections for 800A Frame MCCBs

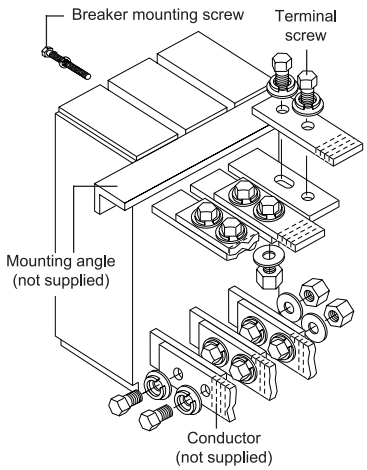

Rear Connections for 1250A and 1600A frame MCCBs

Plug-in Mounting

The plug-in mounting system allows fast replacement of the MCCB body without the need to disturb the terminations. Solid conductors or cables terminated with compression terminals can be used. Plug-in mounting is available for 800A and 1250A frame MCCBs.

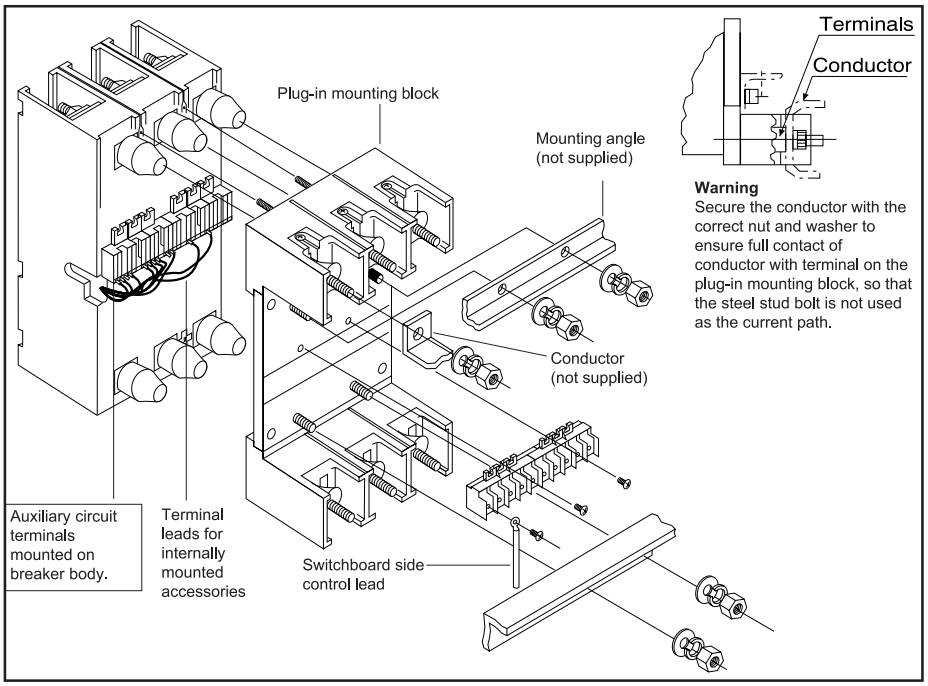

IP20 Protection (Optional)

IP-20 degree of protection and safety trip are available for plug-in type breakers, for switchboard and distribution board use.

Safety Trip (standard)

(Trip first, plug-in mechanism)
The breaker will trip automatically, if it is withdrawn while still in the 'ON' position. It is not possible to "plug-in" the breaker when it is in the 'ON' position.

Drawout Mounting

Two types of drawout mounting system are used, depending on the frame size of the MCCB.

Two-position type

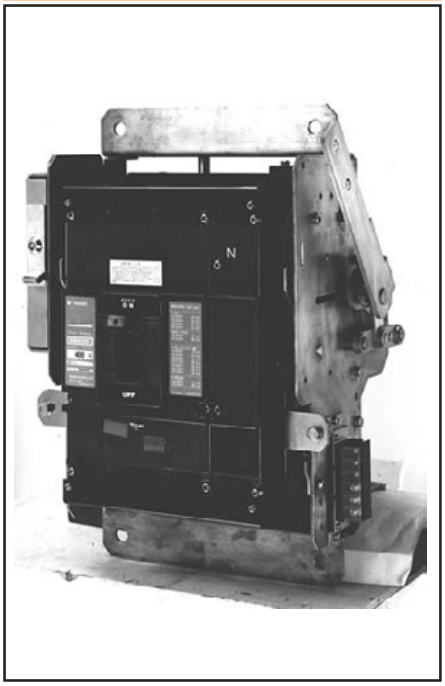

800A frame and 1250A frame

- The plug-in type breaker is housed in the draw-out cradle.
- The draw out cradle has two positions “Connected” and “Isolated”.
- The auxiliary circuits are automatically connected or isolated by the auxiliary circuit terminals on the plug-in breaker. Manual connector type is available on request.When a motor operator is fitted, the circuits are manually connected (manual connector type).
- Safety Trip (first trip draw out mechanism). The breaker will trip automatically if it is drawn out while still in the “on” position.
- Position keylock in isolated position (optional) available on request.
- Position switch (1ab) in Connected position (optional) available on request.
- IP-20 degree of protection (Standard)

Three-position type

1600A frame

- The draw out cradle has three positions “Connected”, "Test" and “Isolated”.
- The auxiliary circuits are automatically connected and isolated by the disconnect contacts.
  The auxiliary circuits are as follows:
  Connected in “Connected” and “Test” positions and isolated in the “Isolated” position.
- Safety shutters are available (optional) which automatically cover the live parts on the cradle side in the isolated position.
- Safety trip (trip first, draw-out mechanism) The breaker will trip automatically if it is drawn out while still in the “ON” position.

Insulation Distances

Attention

Exposed conductors must be insulated up to the breaker terminals. Interpole barriers or optional terminal covers are recommended. If optional terminal covers are used, insulate the exposed conductor until it overlaps the terminal cover.

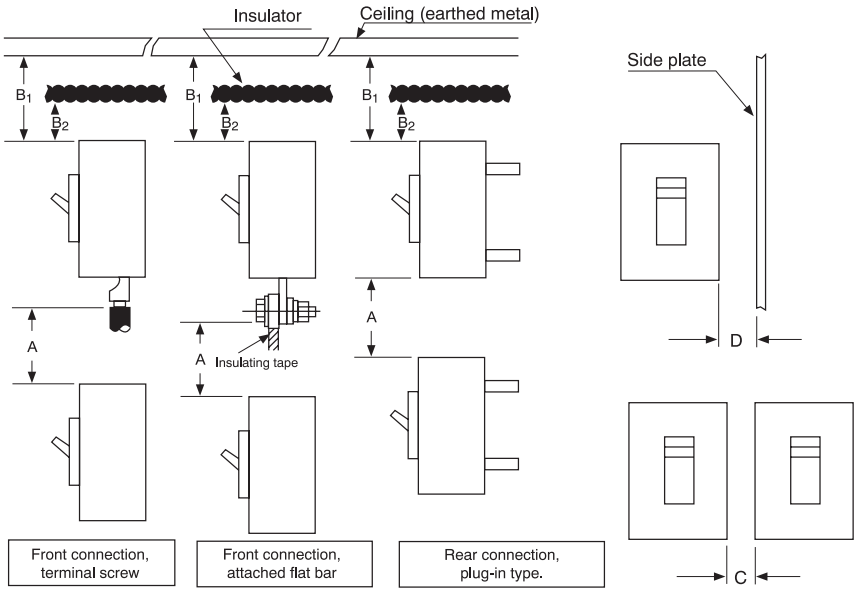

A : Distance (refer to Table 1) from lower breaker to open charging part of terminal on upper breaker (front connection) or the distance from lower breaker to upper breaker end (rear connection and plug-in type).
B_1 : Distance from breaker end to ceiling (earthed metal)
B_2 : Distance from breaker end to insulator
C : Clearance between breakers
D : Distance from breaker side to side plate (earthed metal)

This table is valid for 380/415V

Table 1

Series	Breaker	A	B_1	B_2	C	D
	XS800NJ,XS800SE, XH800SE, XH800PJ XH800PE	120	70	40	0	30
	XS1250CE, XS1250SE	150	70	40	0	30
	TL800NE, XS1600CE, XS1600SE, TL1250NE	150	150	100	0	100

Standard Installation Environments and Special Treatments

Tembreak Ciruit Breakers are designed and built to be used under standard operating conditions. Breakers required for conditions other than standard are available on request. Please specify when ordering.

Standard operating conditions are in accordance with IEC 60947-2
Operating ambient temperature - 5° C to 40° C
When a thermal magnetic breaker is used at a temperature exceeding its calibrated temperature of 40°c, 45°c or 50°c, the operating current should be reduced in accordance with ambient compensation curves, section 3. Please contact Terasaki for temperature performance details of microprocessor protected breakers.
Relative humidity 85% max
Altitude 2,000m max
Note:*Atmosphere should not contain dust, smoke, corrosive gases, inflammable gases, moisture or salt.

Special environment	Specification	Nameplate indication
Low Temperature Breaker	This is specially treated for storage and use at low temperature. The lowest limit is -40° C for storage and -20° C for use. The breaker is calibrated at 40° C or, 45° C for marine use and requires an appropriate adjustment of the specified characteristics. At low temperatures the environment must be free from rapid temperature changes that result in condensation forming or freezing of the breaker.	PROOFED FOR LOW TEMPERATURE Storage -40° C or higher Operation - 20° C or higher
Tropicalization (fungus moisture proof) Breaker	The dielectric strength and other electrical properties of insulating materials that are likely to deteriorate at high temperature and high humidity. The tropicalised breaker uses specially selected materials and special surface treatment for such conditions. **Note**: The maximum conditions for use are 60° C ambient and 95% relative humidity provided that there are no rapid changes in temperature likely to occur. Contact Terasaki for details.	TROPICALISATION Fungus moisture proof
Corrosive Resistant Breaker	The corrosive resistant breaker is specially surface treated for increased corrosion resistance. **Note**: If the breaker is to be used in an atmosphere that has an excess of corrosive gases or moisture and salt then the breaker must be housed in an air tight box, container or cabinet.	CORROSIVE RESISTANT

Power Consumption

Breaker	Rated current (A)	Internal resistance (DC mΩ) Value per pole		Power consumption (DC W) Value per pole	
		FC	Plug-in	FC	Plug-in
XS800NJ	800	0.07	0.11	44.8	70.4
XS800SE	400	0.07	0.11	11.2	17.6
XH800SE	450	0.07	0.11	14.2	22.3
XH800PJ	500	0.07	0.11	17.5	27.5
XH800PE	600	0.07	0.11	25.2	39.6
	700	0.07	0.11	34.3	53.9
	800	0.07	0.11	44.8	70.4
XS1250CE	600	0.04	0.053	14.4	19.1
XS1250SE	700	0.04	0.053	19.6	26.0
	800	0.04	0.053	25.6	33.9
	1000	0.04	0.053	40.0	53.0
	1250	0.04	0.053	57.6	76.3
XS1600CE	800	0.022	** 0.039	14.1	25.0
XS1600SE	900	0.022	** 0.039	17.8	31.6
TL800NE	1000	0.022	** 0.039	22.0	39.0
TL1250NE	1200	0.022	** 0.039	31.7	56.2
	1400	0.022	** 0.039	43.1	76.4
	1600	0.022	** 0.039	56.3	99.8

Note: * Value of rear connected type breaker. ** Value of draw-out type breaker.
Note: All values are intended as a guide only

DIMENSIONS

XS800NN, XS800NJ, XS800SE, XH800SE, XH800PJ, XH800PE

ASL: Arrangement Standard Line
HL : Handle Frame Centre Line

Front connected with optional extension bars fitted

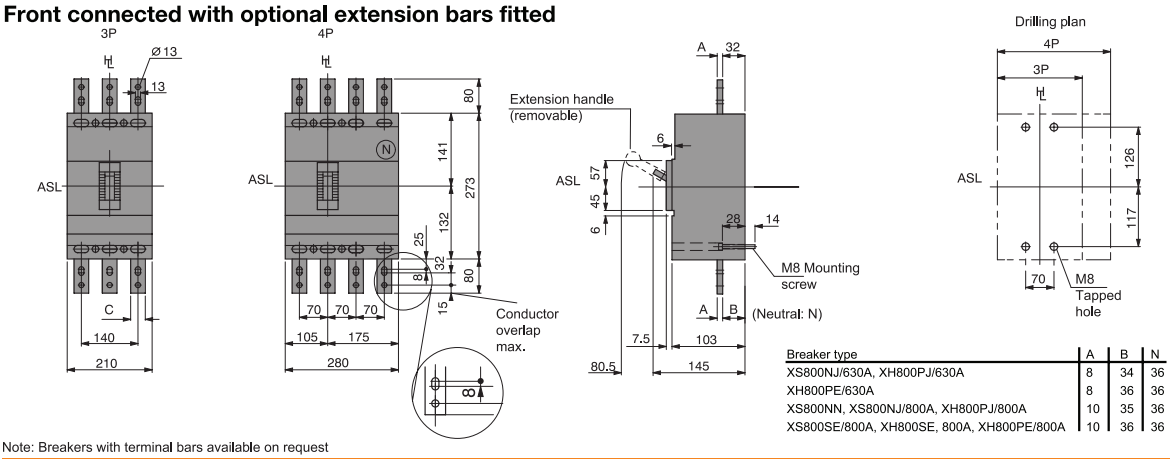

Breaker type	A	B	N
XS800NJ/630A, XH800PJ/630A	8	34	36
XH800PE/630A	8	36	36
XS800NN, XS800NJ/800A, XH800PJ/800A	10	35	36
XS800SE/800A, XH800SE, 800A, XH800PE/800A	10	36	36

Note: Breakers with terminal bars available on request

Rear connected with motor operator

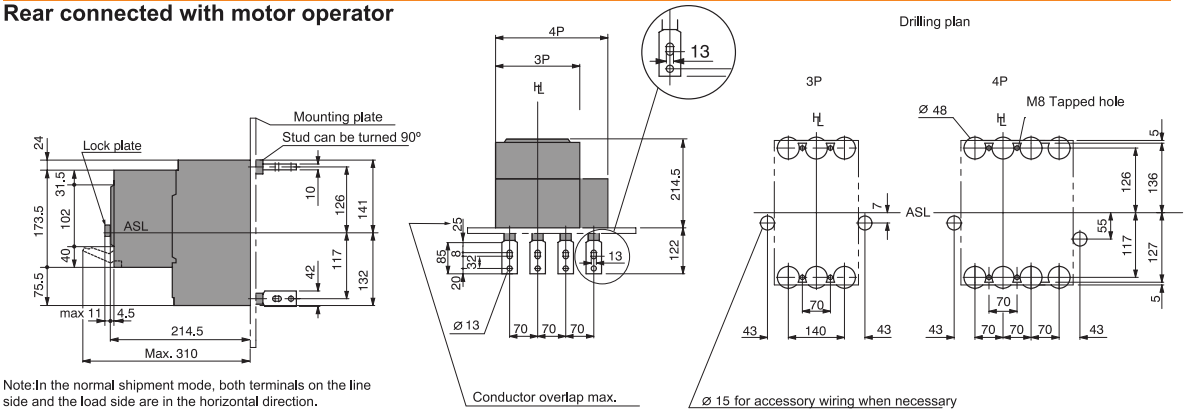

Note:In the normal shipment mode, both terminals on the line side and the load side are in the horizontal direction.

Plug-in

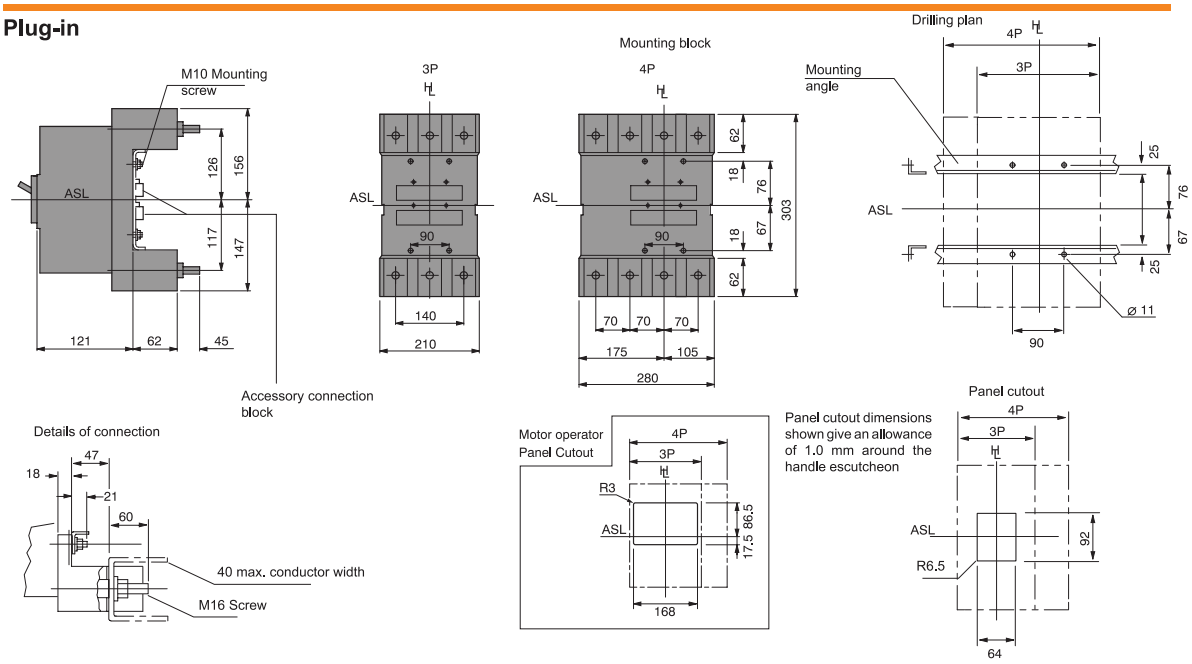

DIMENSIONS

XS1250NN, XS1250CE, XS1250SE

ASL: Arrangement Standard Line
HL : Handle Frame Centre Line

Front connected

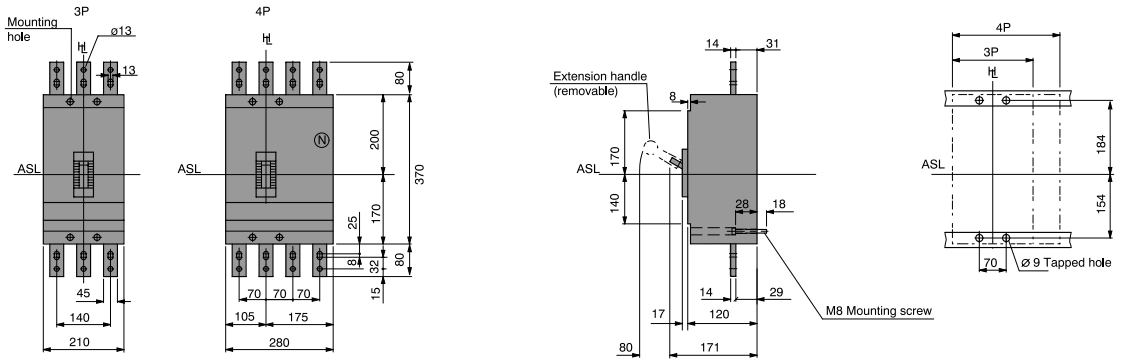

Rear connected with motor operator

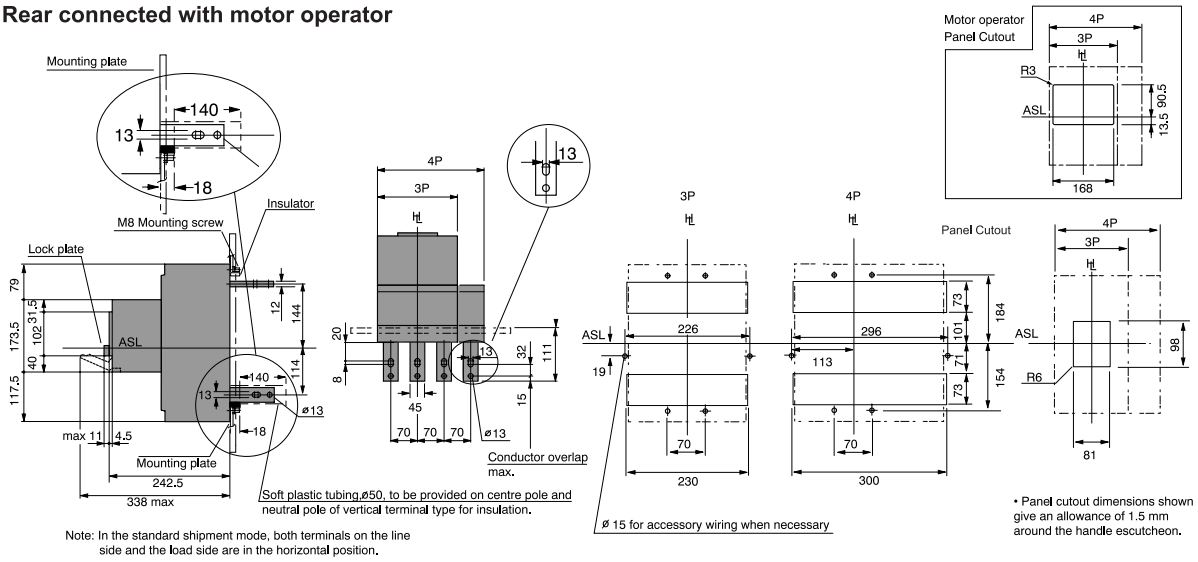

Note: In the standard shipment mode, both terminals on the line side and the load side are in the horizontal position.

Plug-in

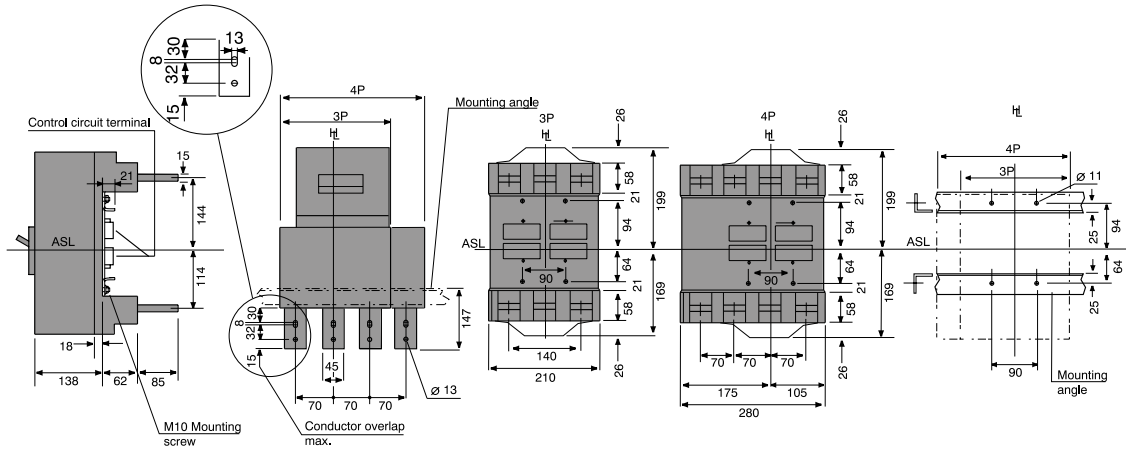

DIMENSIONS

TL800NE, TL1250NE, XS1600NN, XS1600CE, XS1600SE

ASL: Arrangement Standard Line
℄ : Handle Frame Centre Line

Front connected

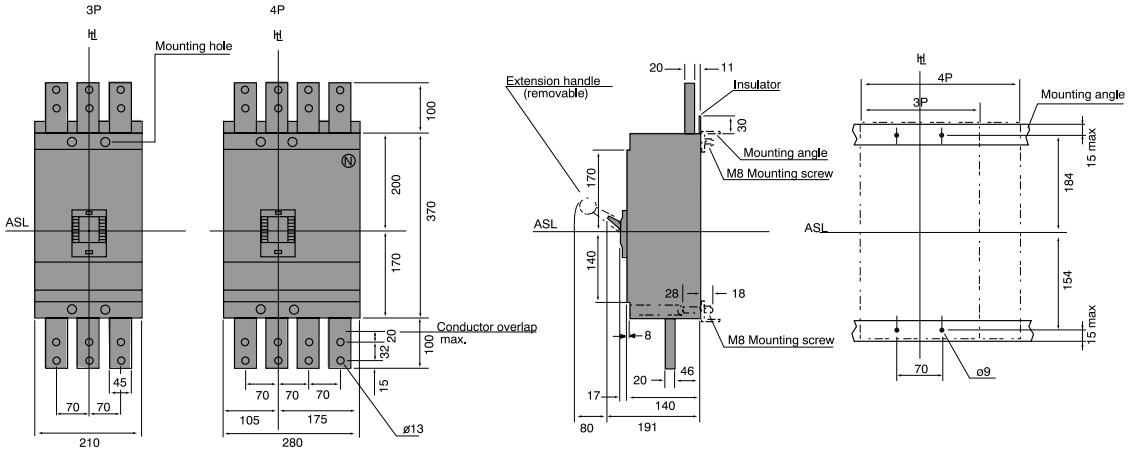

Rear connected with motor operator

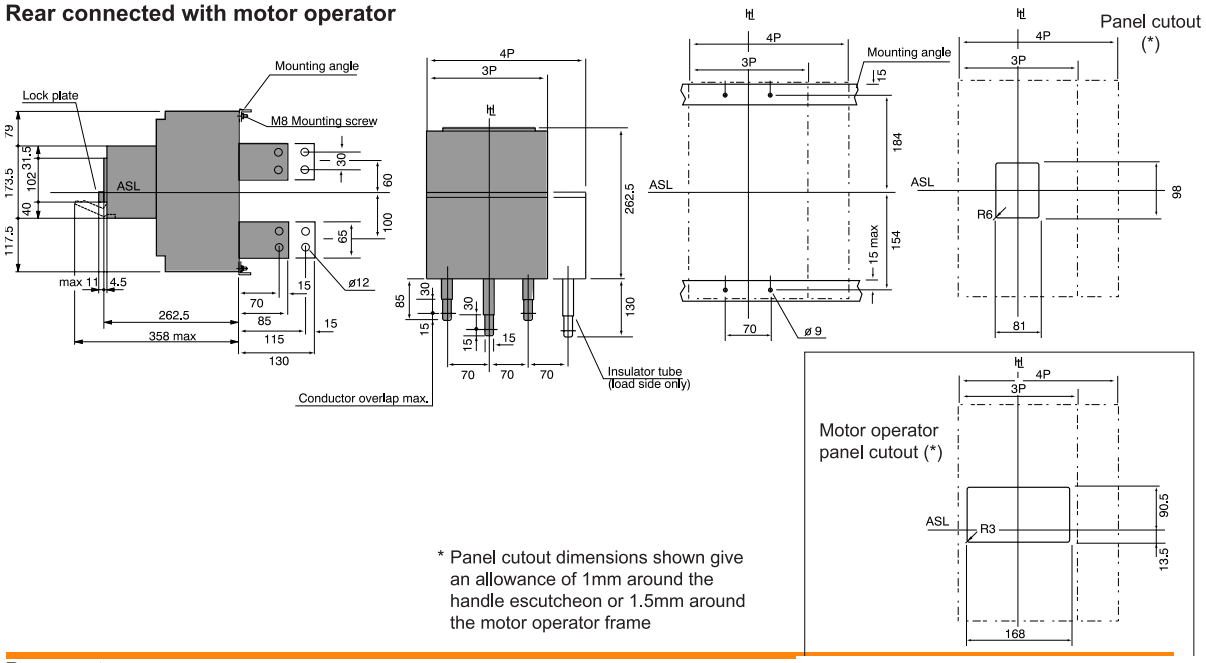

* Panel cutout dimensions shown give an allowance of 1mm around the handle escutcheon or 1.5mm around the motor operator frame

Draw-out

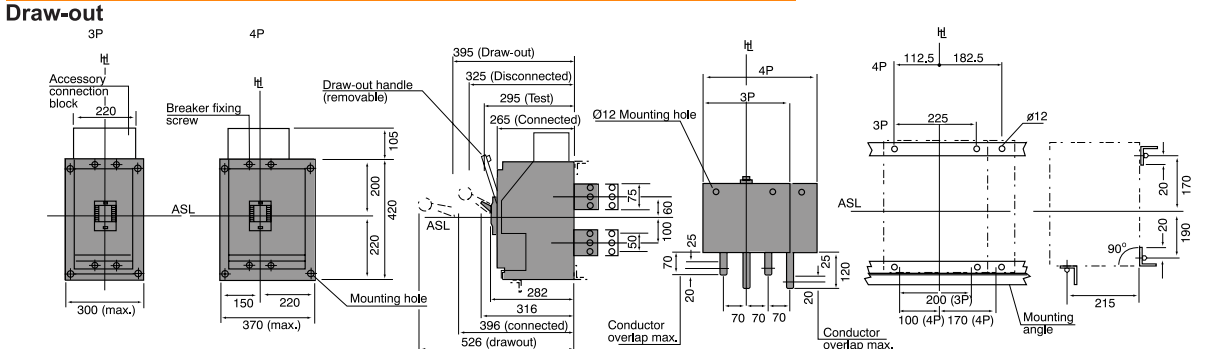

DIMENSIONS

UVT Controller/ OCR Controller

UVT controller, outside configuration

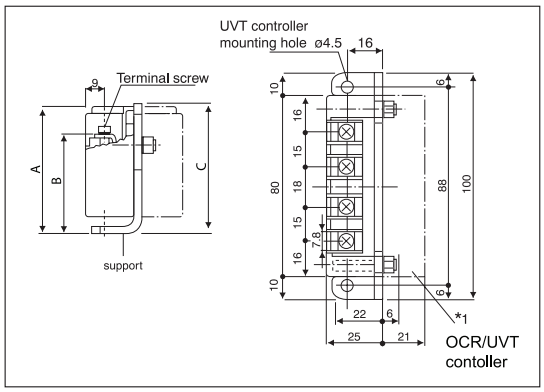

	A	B	C
OCR controller	57.5	45	59
UVT controller	81.5	69	83

Door Mounted Handle

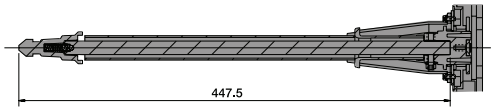

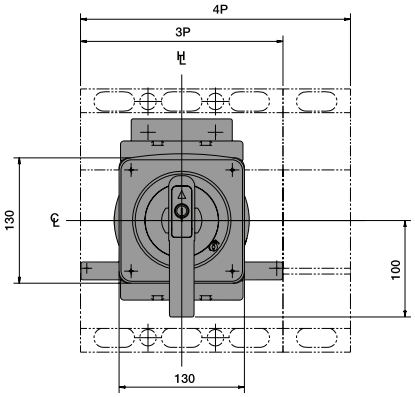

*The Handle shows "ON" position

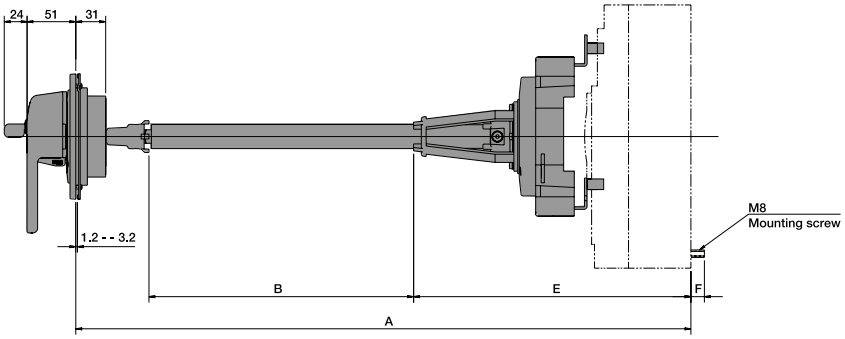

Panel cutout

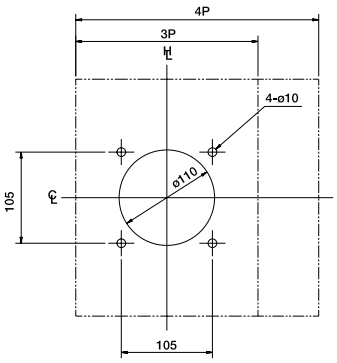

Drilling plan

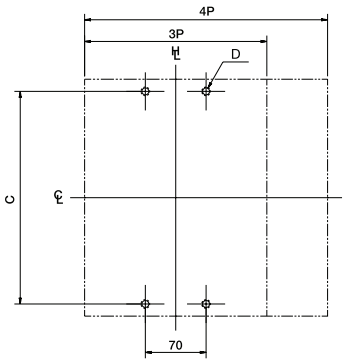

Positional relationship between the hinge and handle as viewed from the OFF side the breaker.

The hinge nust be positioned in the hatched area.

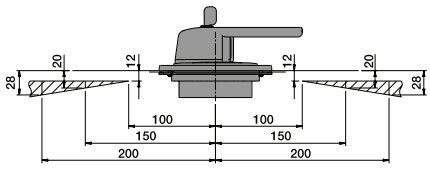

*The handle shows "OFF" position

: Handle Frame Centre Line

Dimensions table (mm)

Frame (A)	Breaker	A	B	C	D	E	F	Shaft Support
800	XS800NJ XS800SE XH800SE XH800PJ XH800PE	638	280	243	M8	288	14	Included
1250	XS1200CE XS1200SE	667	280	338	ø9	317	18	Included
1600	XS1600CE XS1600SE TL800NE TL1250NE	687	280	338	ø9	337	18	Included

1. Dimension A is the maximum dimension without the shaft being cut.
2. The shaft can be cut to the required length. If it is neccessary to cut the shaft so short that it does not protrude beyond the shaft support, the shaft support may be removed.

DIMENSIONS

Breaker Mounted Handle

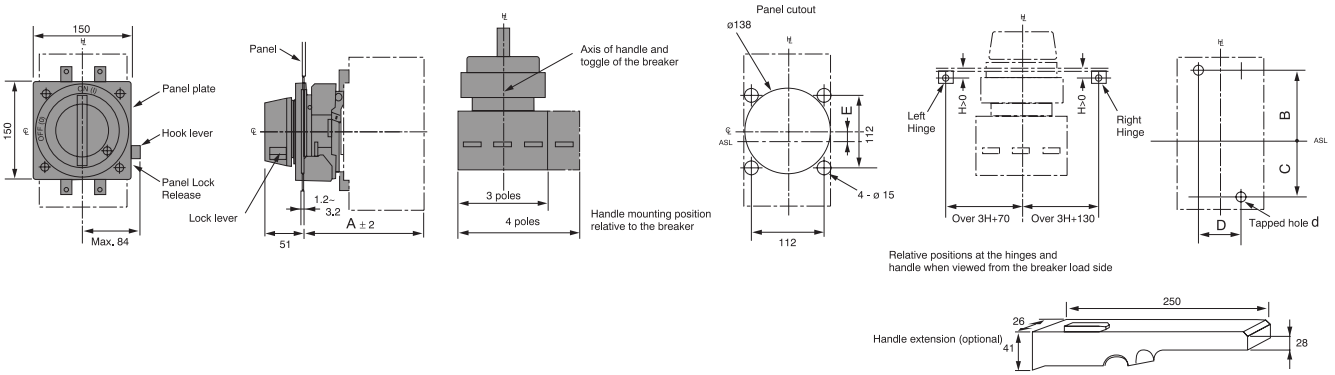

Dimensions table (mm)

Frame (A)	Breaker	A	B	C	D	d	E
800	XS800PJ	168	126	117	70	M8	+4.5
	XS800NJ						
	XS800SE						
	XH800PE						
	XH800SE						
1250	XS1250CE	197	184	154	70	Ø9	+15
	XS1250SE						
1600	XS1600CE	217	184	154	70	Ø9	+15
	XS1600SE						
	TL800NE						
	TL1250NE						

Toggle Extension

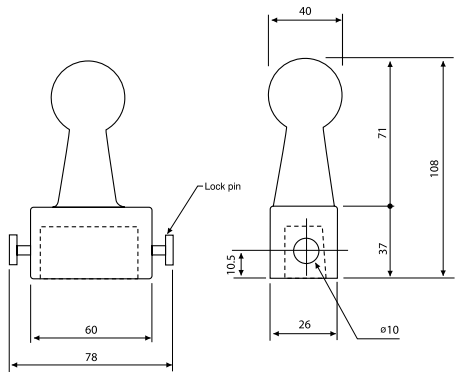

DIMENSIONS

Terminal Covers for Front-Connections

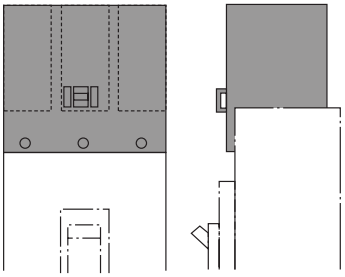

Dimensions table (mm)

Frame (A)	Breaker	Pole	A	B	C	D
800	XS800NJ, XH800PJ	3	215	130	99.5 ('ON' side)	99
	XS800SE, XH800SE, XH800PE	4	285		102.5 ('OFF' side)	
1250	XS1250SE, XS1250CE	3	215	130	115	99
		4	285			

Terminal Covers for Rear Connections and Plug-in Connections

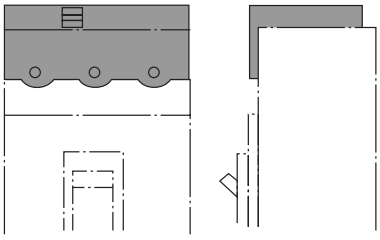

Dimensions table (mm)

Frame (A)	Breaker	Pole	A	B	C	D
800	XS800NJ, XH800PJ	3	206	14	102 ('ON' side)	100.5
	XS800SE, XH800SE, XH800PE	4	280	18	102 ('OFF' side)	98

Interpole Barriers

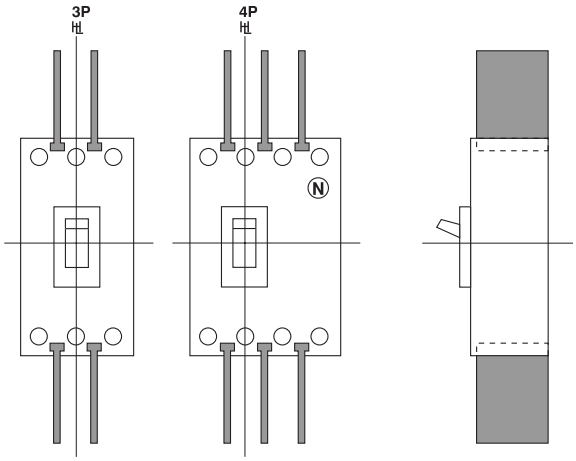

Dimensions table (mm)

Frame (A)	Breaker	A	B
800	XS800NJ, XH800PJ, XS800SE, XH800SE, XH800PE, TL800NE	110	95
1250	XS1250SE, XS1250CE, TL1250NE	110	95
1600	XS1600CE, XS1600SE	110	95

DIMENSIONS

Front Mechanical Interlock

ASL: Arrangement Standard Line

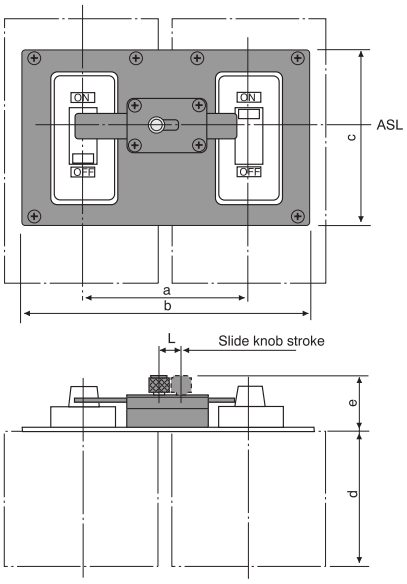

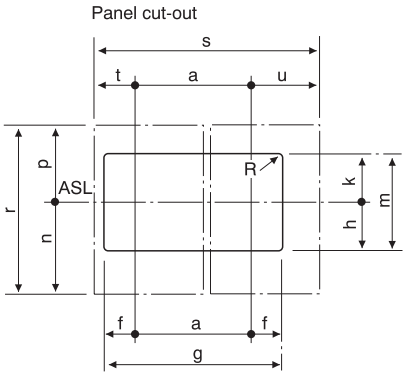

Dimensions table (mm)

Frame (A)	Breaker	Pole	a	b	c	d	e	f	g	h	k	m	n	p	r	s	t	u	L	R
800	XS800NJ	3	220	350	136	103	31.6	66.5	353	57.5	81.5	139	132	141	273	430	105	105	30	8.5
	XS800SE	4	290	420	136	103	31.6	66.5	423	57.5	81.5	139	132	141	273	570	105	175	30	
	XH800PJ																			
	XH800SE																			
	XH800PE																			
1250	XS1250SE	3	220	340	129	120	39.6	61.5	343	58	74	132	170	200	370	430	105	105	30	8.5
	XS1250CE	4	290	410	129	120	39.6	61.5	413	58	74	132	170	200	370	570	105	175	30	8.5
1600	XS1600SE	3	220	340	129	140	39.6	61.5	343	58	74	132	170	200	370	430	105	105	30	8.5
	TL800NE																			
	TL1250NE	4	290	410	129	140	39.6	61.5	413	58	74	132	170	200	370	570	105	175	30	8.5
	XS1600CE																			

Rear Mechanical Interlock

ASL: Arrangement Standard Line
℄ :Handle Frame Centre Line

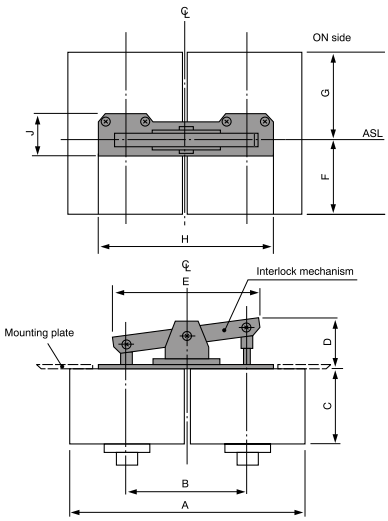

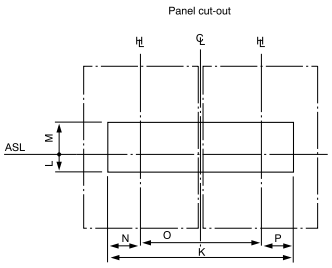

Dimensions table (mm)

Frame (A)	Breaker	Pole	A	B	C	D	E	F	G	H	J	K	L	M	N	O	P
800	XS800NJ	3	430	220	103	74	250	132	141	430	83	440	41	52	110	220	110
	XS800SE	4	570	290	103	74	320	132	141	500	83	510	41	52	110	290	110
	XH800PJ																
	XH800SE																
	XH800PE																

DIMENSIONS

Wire Mechanical Interlock

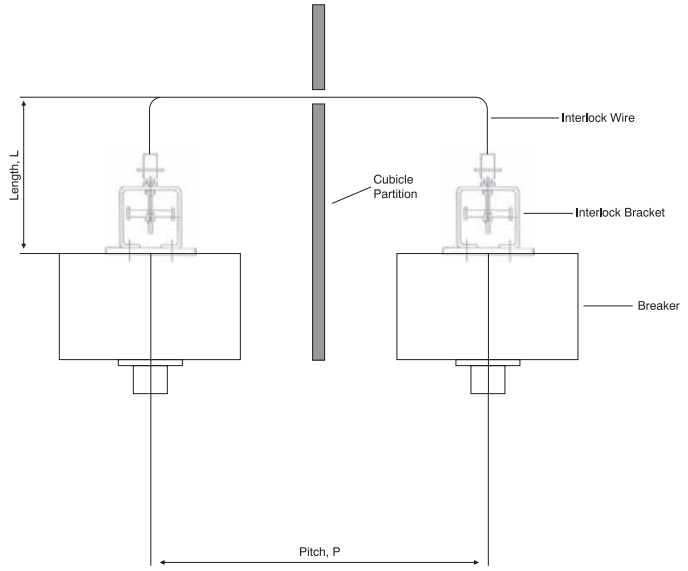

Installation of wire mechanical interlock

Wire Length (m)	Mounting Pitch, P (mm)	Hole Position Length, L (mm)	Wire Support Method
1.5	1000 ⬇ 900 ⬇ 750 ⬇	550 ⬇ 600 ⬇ 700 ⬇	Support 2 points at equal intervals
1.0	650 ⬇ 500 ⬇ 350 ⬇ * (1) * (2)	450 ⬇ 500 ⬇ 530	Support at the centre

* (1): minimum of 60mm + cubicle partition thickness
* (2): minimum of arc base distance if vertical.
⬇ : intermediate dimensions are acceptable.

Terminal Blocks

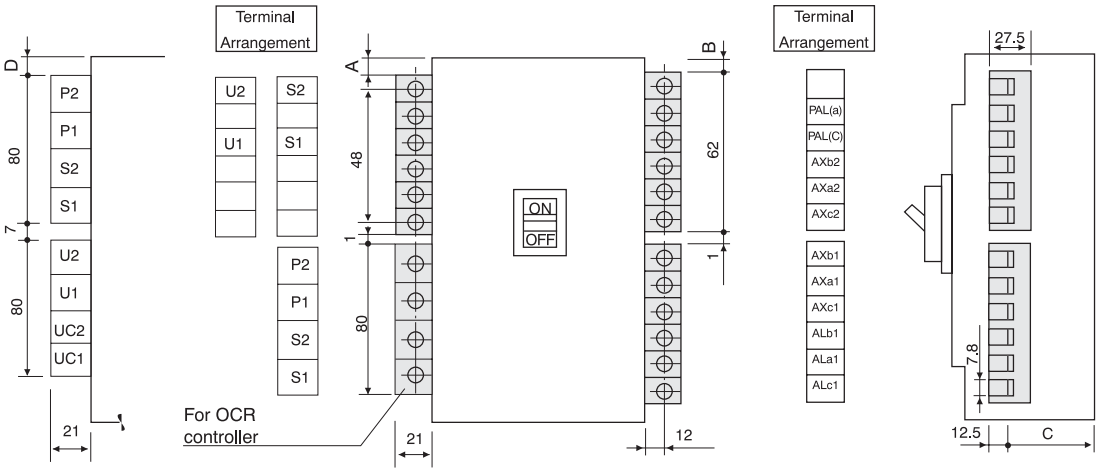

Dimensions table (mm)

Frame (A)	Breaker	A	B	C	D
800	XS800NJ XS800SE XH800PJ XH800SE XH800PE	88	88	60	64
1250	XS1250SE XS1250CE	51	51	72	51
1600	XS1600CE XS1600SE TL1250NE TL800NE	51	51	92	51

DIMENSIONS

Door Flange

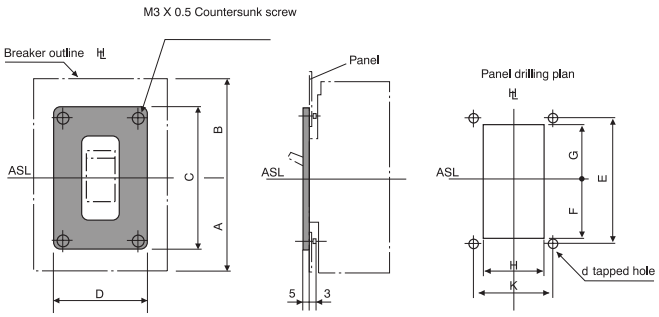

Dimensions table (mm)

Frame (A)	Breaker	A	B	C	D	E	F Min	F Max	G Min	G Max	H Min	H Max	K	d
800	XS800NJ XS800SE XH800PJ XH800SE XH800PE	132	141	135	95	120	48	56	48	56	70	90	80	M3x0.5
1250	XS1250SE XS1250CE	170	200	150	120	135	51	63.5	51	63.5	85	115	80	M3x0.5
1600	XS1600SE XS1600CE TL800NE TL1250NE	170	200	150	120	135	51	63.5	51	63.5	85	115	80	M3x0.5

Panel Cutout for Adjustment Dials

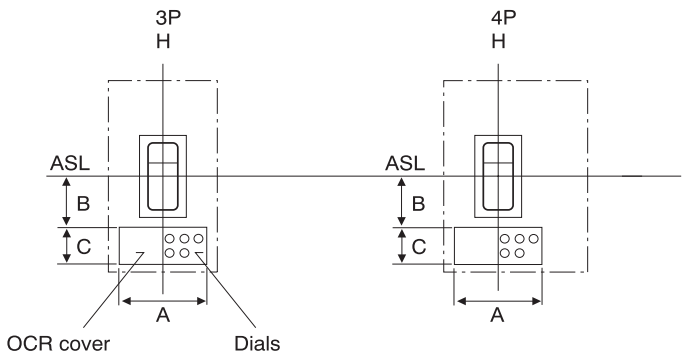

Dimension table (mm)

Frame size (A)	MCCB type	Dimensions A	Dimensions B	Dimensions C
800	XS800NJ XS800SE XH800PJ XH800PE XH800SE	210	57	48.5
1250	XS1250CE XS1250SE	210	57.5	58
1600	XS1600CE XS1600SE TL800NE TL1250NE	210	57.5	58

DIMENSIONS

Toggle Operation and Dimensions

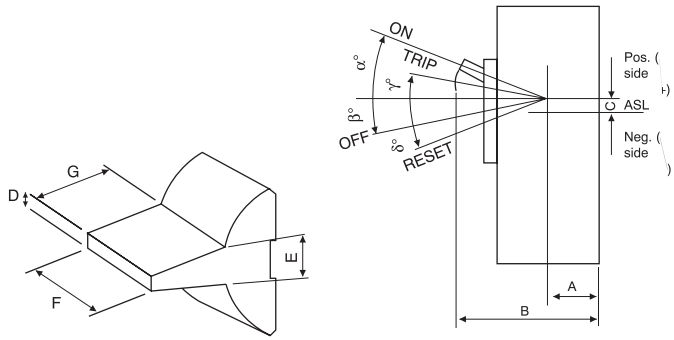

Frame (A)	Breaker	Operation angles				Dimensions (mm)							Operation effort (kgf.)			
800	XS800NJ XS800SE XH800PJ XH800PE XH800SE	20	8.5	11	10.5	43.2	144	-6.8	11	12.5	40	33	12.3	15	24	100.8
1250	XS1250CE XS1250SE	22	4	12	9	73.5	171.8	-2.8	11	12.5	40	30	16	30	35	98.3
1600	XS1600CE XS1600SE TL800NE TL1250NE	22	4	12	9	93.5	191.8	-2.8	11	12.5	40	30	16	30	35	98.3

Position of Trip Button and Externally Mounted Accessories

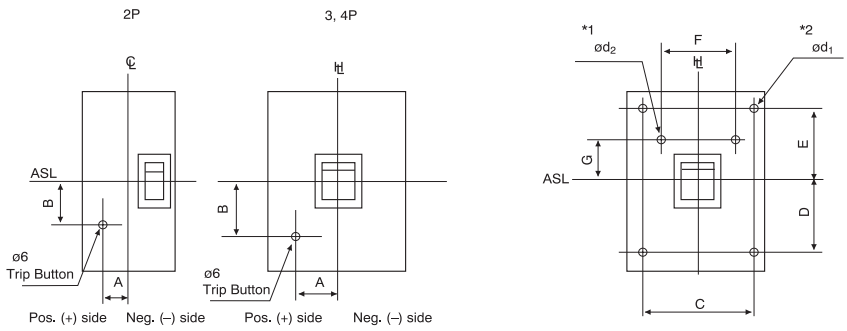

Frame (A)	Breaker	Poles	Trip button		Diameter							Lower hole		
			A	B	C	D	E	F	G	$ød_1$	Depth	$ød_2$	Depth
800	XS800NJ XS800SE XH800PJ XH800PE XH800SE	3 4	+15	74	90 160	125.5	134.5	105	73	4.65	5.1	5.65	6
1250	XS1250CE XS1250SE	3 4	0	72.5	100 170	155	185	–	–	4.65	5	–	–
1600	XS1600CE XS1600SE TL800NE TL1250NE	3 4	0	72.5	100 170	155	185	–	–	4.65	5	–	–